BLW PNEUMATIC

Product Selection Guide

COMPANY PROFILE

BLW Pneumatic Technology is a company specializing in the production of solenoid valves, hand turn valves, foot valves, quick exhaust valves, slide valves and other products with technology as a guide. Since its inception, the company has focuse on product development and training of scientific and technical personnel, and now has a complete set of core technology and scientific quality management system for product development and manufacturing.

Our company has been serving the society with perfect quality, excellent service, superb technology and reasonable price Quality first, reputation first is our eternal promise to customers and our eternal pursuit and goal. The company constantly increases the investment in product development, and constantly develops and improves products to meet the needs of customers with better quality and more favorable price, and to provide new and old customers with excellent performance products and convenient service at any time and anywhere.

In the pursuit of unlimited and innovative development, we warmly welcome you to join us.

Product Catalog

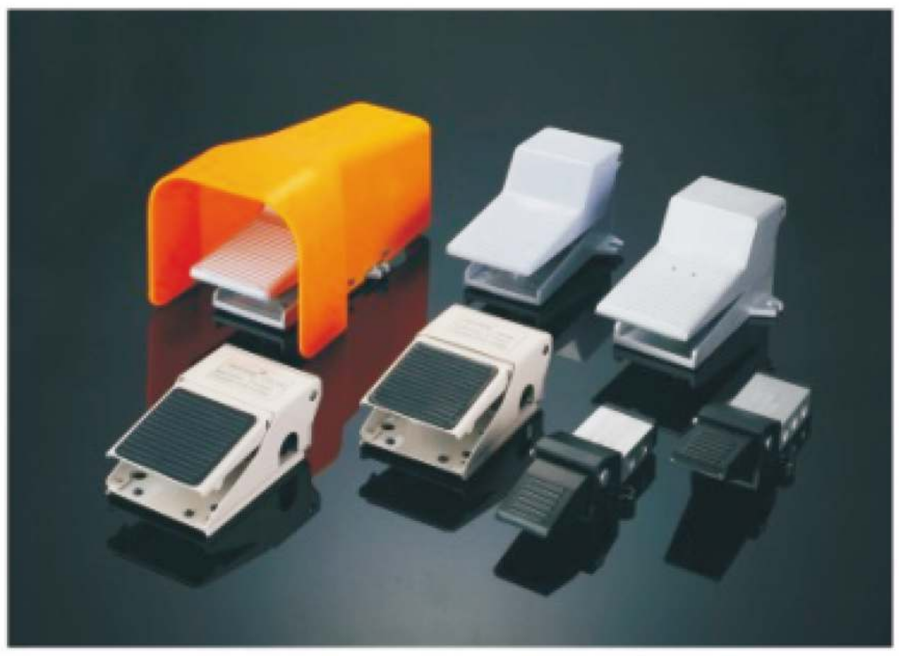

BLW

We have the ability to innovatethe drive to create

The pursuit of perfect quality and more enthusiastic service

BLW

Symbols

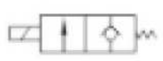

Product Features

1. Direct-acting normally closed type two-port two-position solenoid valve, rapid and sensitive direction change.
2. Lightweight and compact structure.
3. The valve body material is brass, the solenoid coil heat-resistant grade B, the seal material is fluorine rubber (VITON), suitable for a variety of working media.

Flow Characteristics

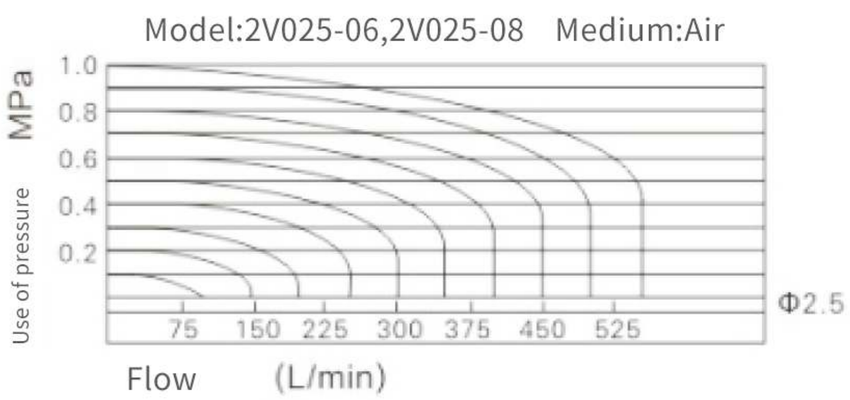

Standard Specification

Model	2V025-06	2V025-06-10F	2V025-08
Working medium	Air, water, oil		
Action mode	Direct-acting type		
Initial state	Normally closed type		
Flow through orifice diameter (mm)	2.5	2.5	2.5
CV value	0.23	0.23	0.25
Pipe diameter	G1/8	G1/8	G1/4
Fluid viscosity	Under 20CST		
Operating pressure range	0~1.0MPa(0~145psi)	0~1.0MPa(0~145psi)	0.05~1.0MPa(7~145psi)
Guaranteed pressure resistance	1.5MPa(215psi)		
Body material	Copper surface nickel plating treatment		
Seal material	VITON		
Excitation time sound	Less than 0.05 seconds		

*PT and NPT are available according to the tube tooth type.

Coil specifications

Power supply type	Power frequency	Allowable voltage variation	Power connection method	Power consumption (AV/W)	Insulation grade	Temperature °C
AC	50	±15%	DIN insertion degree out type	7.0VA	Grade B	35
	60					
DC	–	±10%		7.0W		45

Model indication method

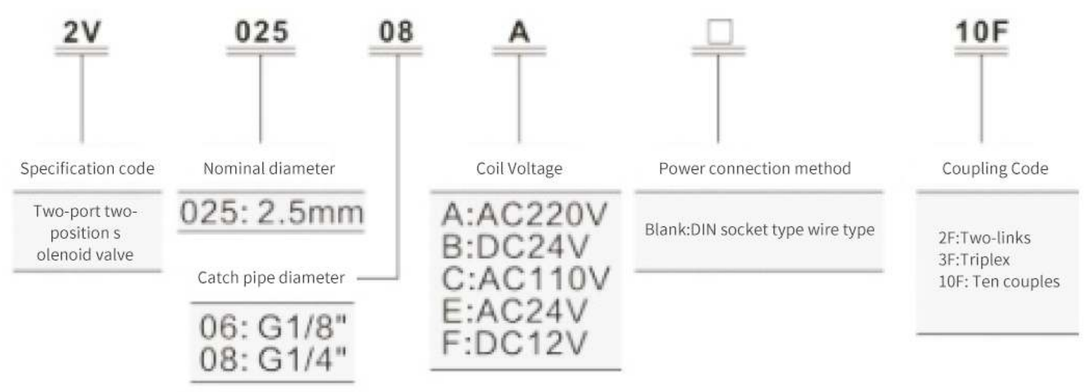

External dimension drawing (mm)

2V025DIN SOCKET TYPE

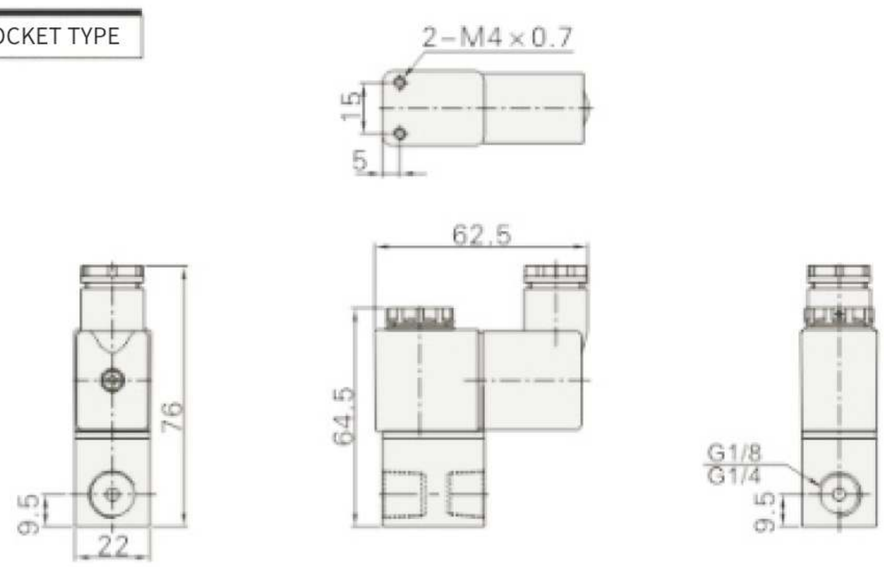

2V025 OUTLET TYPE

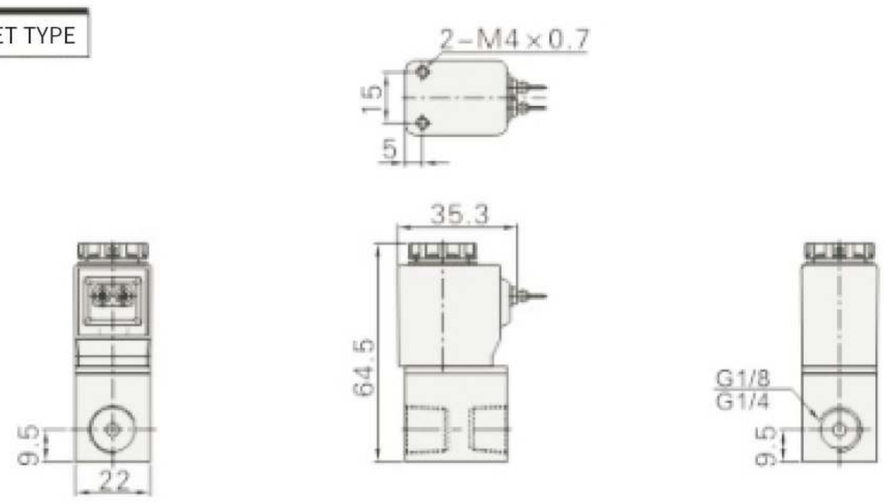

2V025-F PLATE SIZE

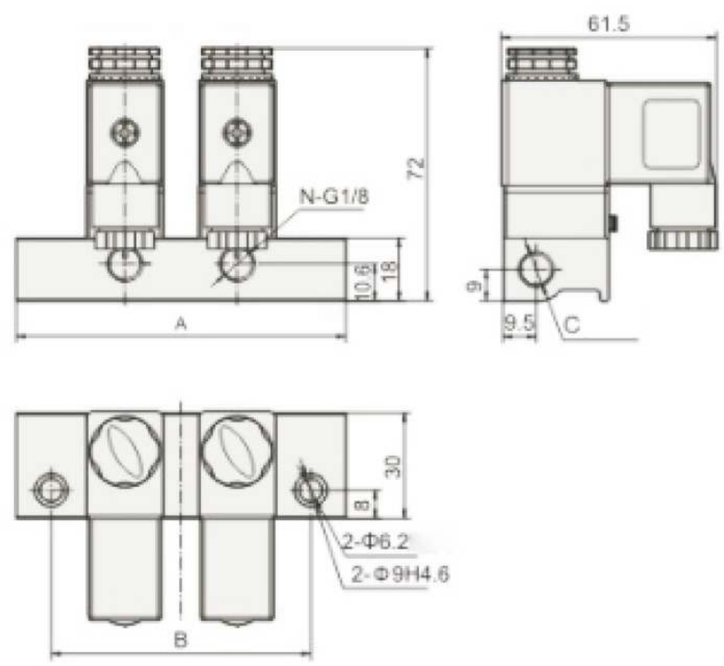

	2F	3F	4F	5F	6F	7F	8F	9F	10F
A	94	97.5	120	142.5	165	187.5	210	232.5	255
B	74	77.5	100	122.5	145	167.5	190	212.5	235
C	G1/8	G1/8	G1/8	G1/4	G1/4	G1/4	G1/4	G1/4	G1/4
N	2	3	4	5	6	7	8	9	10

Standard Specification

Model	3V1-M5	3V1-06
Working medium	Air (filtered by 40pm or more filters)	
Action mode	Direct-acting type	
Pipe diameter	M5	G1/8
Number of positions	Three mouths and two bits	
Lubrication	Not required	
Operating pressure range	0~0.8MPa(0~114psi)	
Guaranteed pressure resistance	1.5MPa(215psi)	
Operating temperature	-20~70	
Flow through orifice diameter	Φ1mm	
Body material	Aluminum alloy	

*PT and NPT are available by tube tooth type.

Symbols

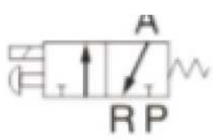

Product Features

1. Direct-acting normally closed type, sensitive commutation
2. No need for oil lubrication.
3. Multiple valves can be integrated to save installation space.
4. With manual device, easy to install and debug;
5. A variety of standard voltage levels are available for selection.

Electrical performance parameters

Projects	Specific parameters
Standard voltage	AC220V、AC110V、AC24V、DC24V、DC12V
Operating voltage range	AC: ±15% DC: ±10%
Power consumption	AC:6VA DC: 6W
Protection level	IP65(DIN40050)
Heat resistance grade	B
Power connection type	DIN socket type, outlet type
Excitation time	Less than 0.05 seconds
*Maximum operation frequency	10 times/second

* The maximum operating frequency is the no-load condition.

Flow Characteristics

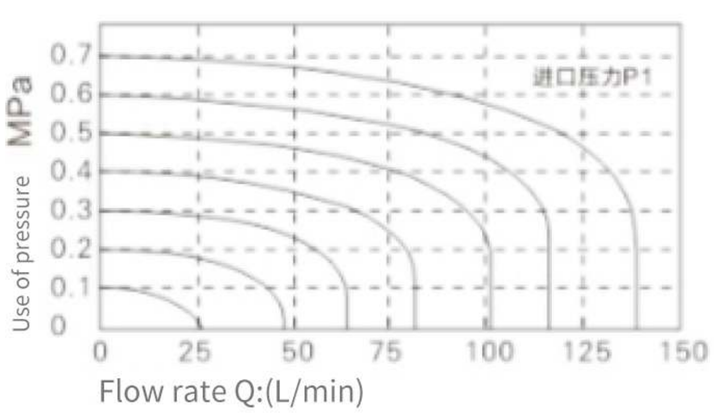

Internal structure

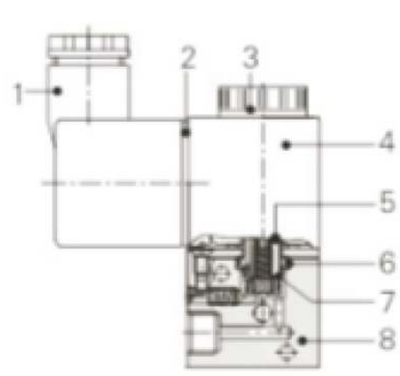

Serial number	Name	Serial number	Name
1	Wiring terminals	5	Movable iron set
2	Terminal spacer	6	O-order
3	Fixing nut	7	Restore spring
4	Coils	8	Ontology

Model number indication method

3V - 1 - 06 - A - □ - □ ①

3V	1	06	A	□	□ ①
Specification code	Series code	Diameter	Standard Voltage	Power connection method	Valve body identification code
3V:Three-port two-position solenoid valve	1:1	M5：M5 06：G1/8	A:AC220V B:DC24V C:AC110V E:AC24V F:DC12V	Blank: DIN socket type l:Outlet type	Blank:Tandem type Single type

① When the receiver is M5 teeth, this code is empty.

External dimension drawing (mm)

DIN socket (series type)

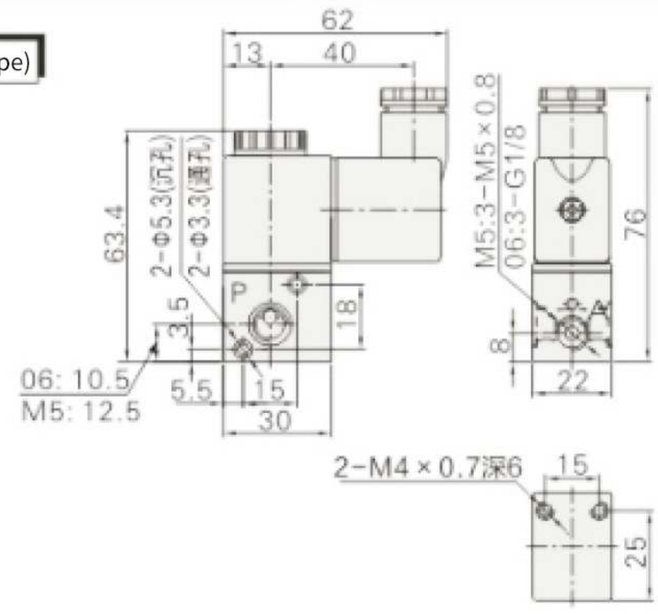

Outlet type (series type)

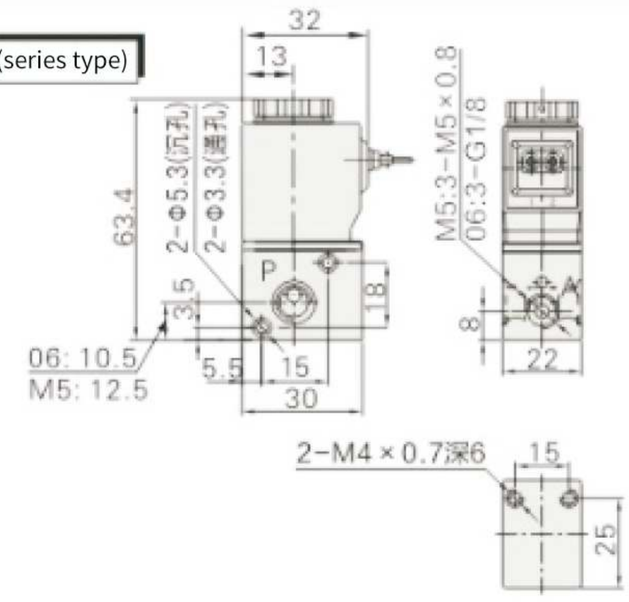

DIN socket (single type)

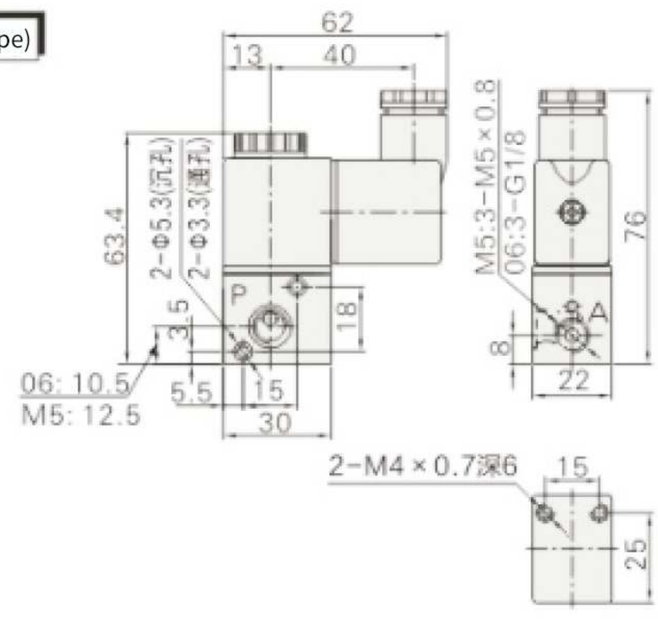

Outlet type (series type)

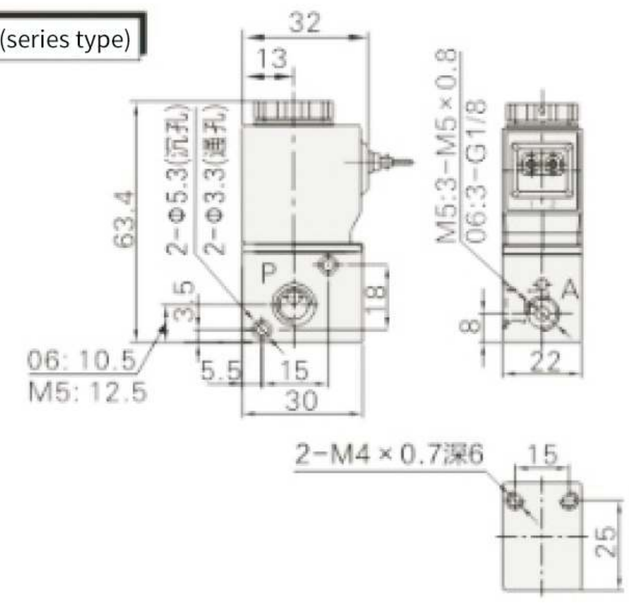

Model number indication method

3V1	–	06	A	□	3F
Specification code		Diameter	Standard Voltage	Power connection method	Number of connections
3V:Three-port two-position solenoid valve		M5：M5 06：G1/8	A:AC220V B:DC24V C:AC110V E:AC24V F:DC12V	Blank: DIN socket type l:Outlet type	1F:1 2F:2 3F:3 … … 20F:20

Plate connection

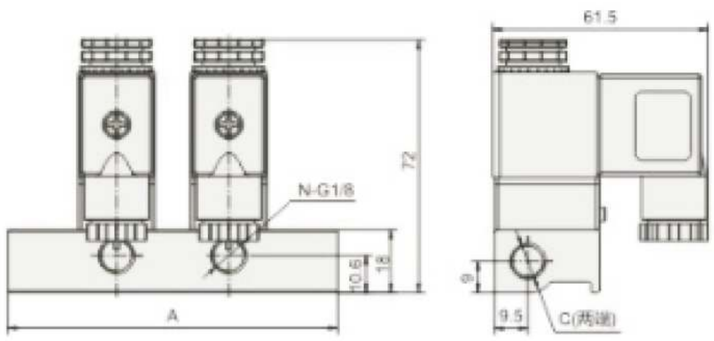

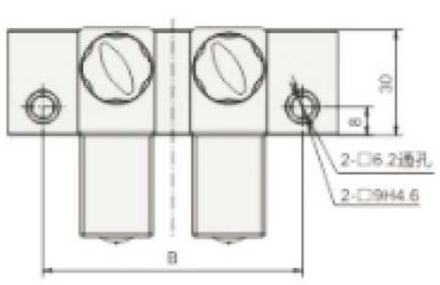

	2F	3F	4F	5F	6F	7F	8F	9F	10F
A	94	97.5	120	142.5	165	187.5	210	232.5	255
B	74	77.5	100	122.5	145	167.5	190	212.5	235
C	G1/8	G1/8	G1/8	G1/4	G1/4	G1/4	G1/4	G1/4	G1/4
N	2	3	4	5	6	7	8	9	10

Standard Specification

Model	3V110-M5	3V120-M5	3V110-06	3V120-06
Working medium	Air (filtered by a 40um or higher filter)			
Action mode	Pilot			
*Pipe diameter	M5		G1/8	
Effective cross-sectional area	5.5mm²（Cv=0.31）		12.0mm²（Cv=0.67）	
Number of positions	Three mouths and two bits			
**Lubrication	Not required			
Use pressure range	0.15-0.8MPa(21~114psi)			
Guaranteed pressure resistance	1.5Mpa			
Operating temperature	-20-70			
Body material	Aluminum alloy			

"PT, NPT are available according to the tube tooth type.
*If there is oil lubrication, it cannot be stopped in the middle, and the recommended lubricant is ISOVG32 or the same level of oil.

Electrical performance parameters

Item	Specific parameters
Standard Voltage	AC220V、AC110V、AC24V、DC24V、DC12V
Operating voltage range	AC:±15% DC:±10%
Power consumption	AC:3VA DC: 3W
Protection level	IP65(DIN40050)
Heat resistance class	Class B
Electrical type	DIN socket type, outlet type
Excitation time	Less than 0.05 seconds
Maximum operation frequency	5 times/sec

"The highest operating frequency is the no-load condition.

Symbols

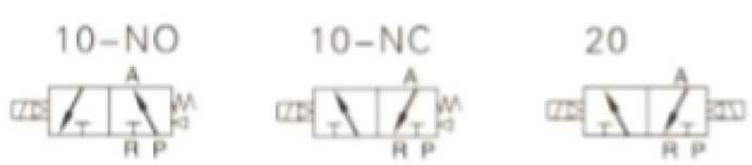

Product Features

1. Pilot method: external and internal optional.
2. Sliding column structure, good sealing, responsive.
3. Double-headed solenoid valve with memory function.
4. Bore with special processing technology, low friction resistance, low starting air pressure, long service life.
5. No need for oil lubrication.
6. With manual device, easy to install and debug.
7. A variety of standard voltage levels are available for selection.
8. Can be integrated with the base valve group, saving installation space.

Flow Characteristics

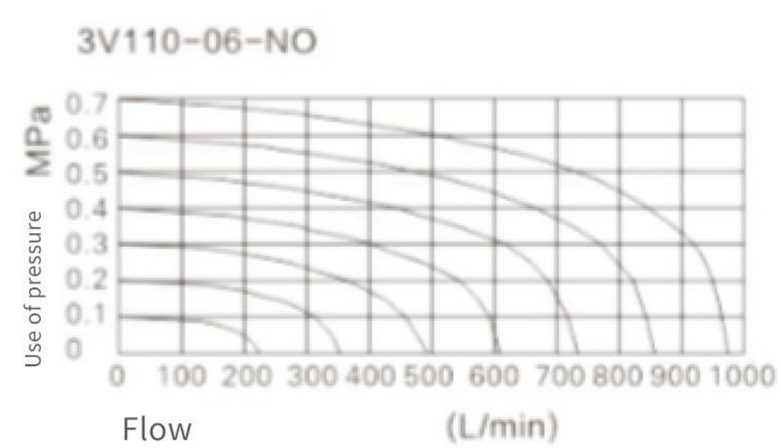

Model indication method

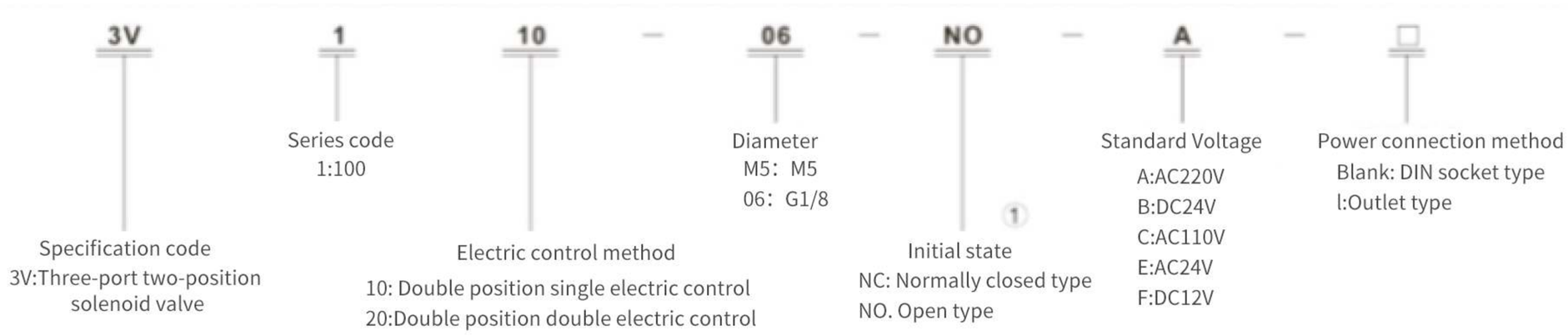

1 Note: Double position double electric control type is not normally open, normally closed, so this code is blank.

Internal structure

3V110

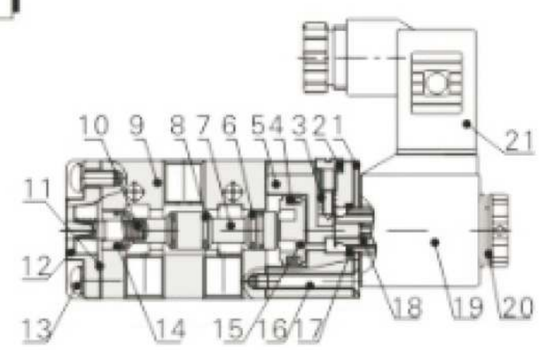

3V120

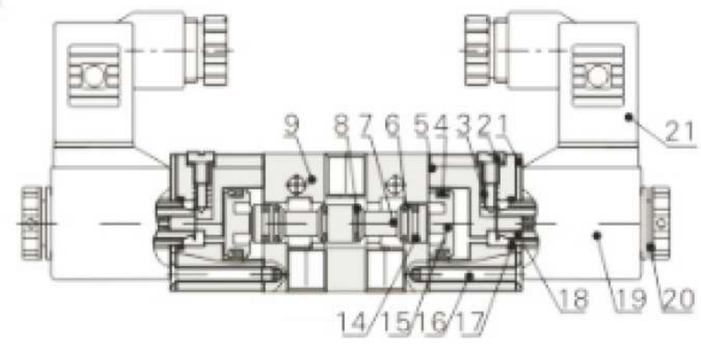

Number	Name	Number	Name	Number	Name
1	Fixed iron piece	8	O-order	15	Piston
2	Manual pin	9	Body	16	Countersunk head screws
3	Spring	10	Spring	17	O-ring
4	Shaped O-ring	11	Check gasket	18	movable iron
5	Guide body	12	Bottom cover	19	Coil
6	Shaped O-ring	13	Round head screws	20	Fixing nut
7	Shaft core	14	Abrasion Resistant Ring	21	Terminal

Dimensional drawing(mm)

3V110DIN socket type

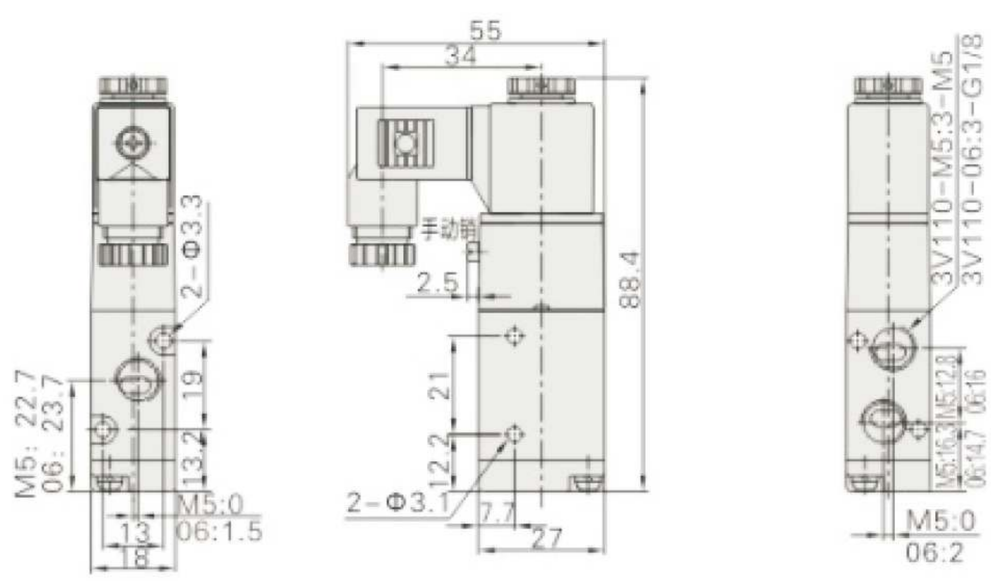

3V110DIN outlet type

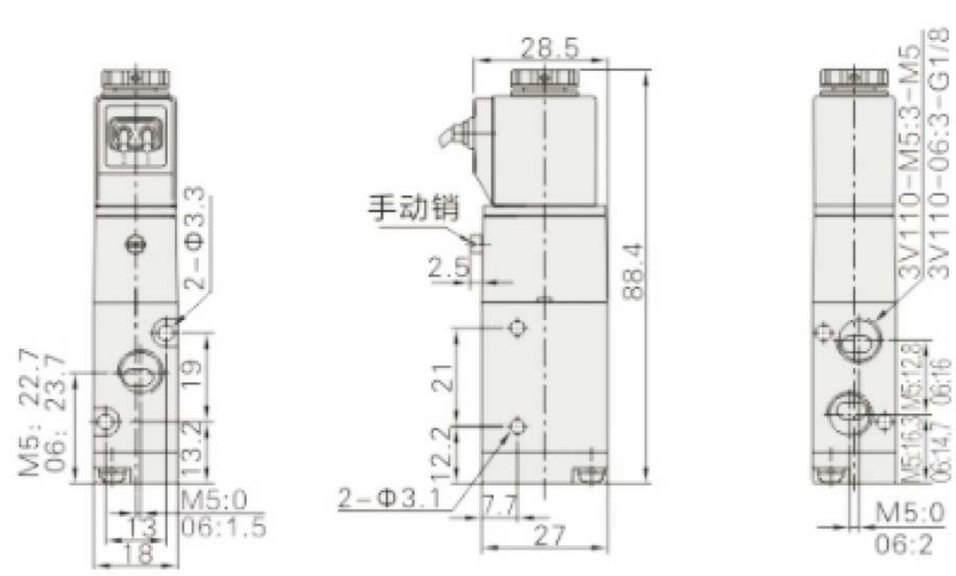

3V120DIN socket type

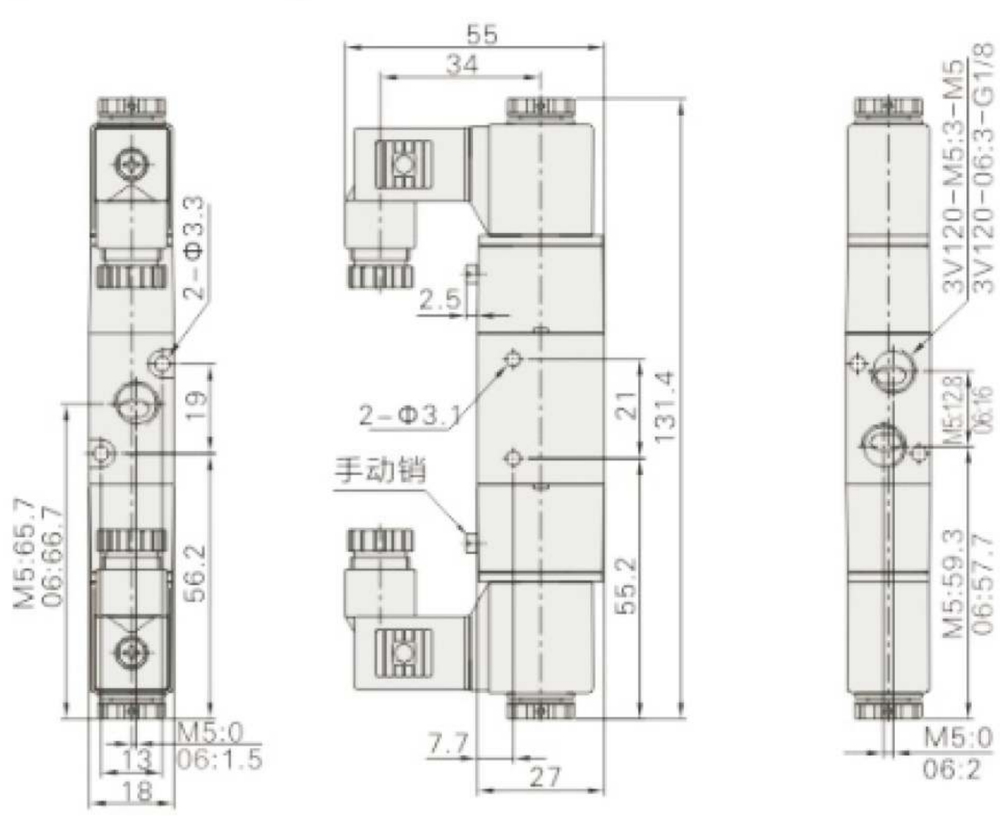

3V120DIN outlet type

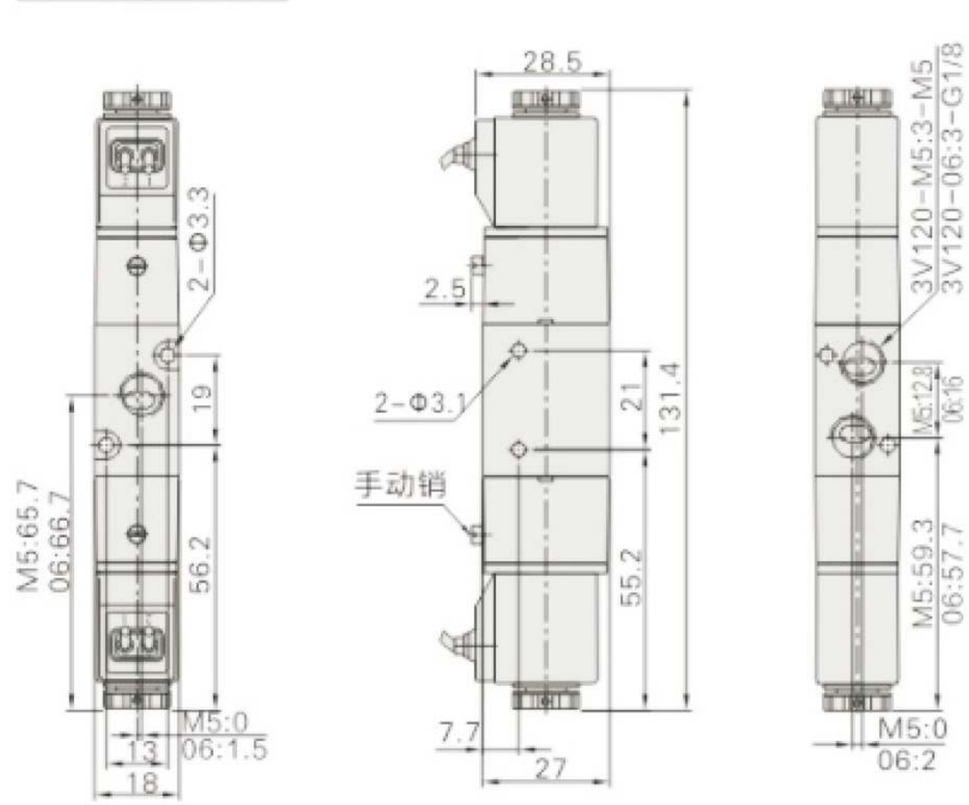

Standard Specification

Model	3V210-06	3V220-06	3V210-08	3V220-08
Working medium	Air (filtered by a 40um or higher filter)			
Action mode	Pilot			
*Pipe diameter	M5		G1/8	
Effective cross-sectional area	14.0mm²（Cv=0.78）		16.0mm²（Cv=0.89）	
Number of positions	Three mouths and two bits			
**Lubrication	Not required			
Use pressure range	0.15-0.8MPa(21~114psi)			
Guaranteed pressure resistance	1.5Mpa(215psi)			
Operating temperature	-20-70			
Body material	Aluminum alloy			

"Takeover tooth type has PT, NPT available;
* If there is oil lubrication the middle must not stop, the recommended lubricant is ISOVG32 or the same level with oil

Electrical performance parameters

Model	3V210-06	3V220-06	3V210-08	3V220-08
Working medium	Air (filtered by a 40um or higher filter)			
Action mode	Pilot			
*Pipe diameter	M5		G1/8	
Effective cross-sectional area	14.0mm²（Cv=0.78）		16.0mm²（Cv=0.89）	
Number of positions	Three mouths and two bits			
**Lubrication	Not required			
Use pressure range	0.15-0.8MPa(21~114psi)			
Guaranteed pressure resistance	1.5Mpa(215psi)			
Operating temperature	-20-70			
Body material	Aluminum alloy			

* The maximum operating frequency is the no-load condition.

Symbols

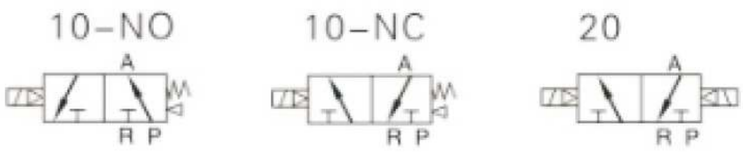

Product Features

1. Pilot method: external and internal optional.
2. Sliding column structure, good sealing, responsive.
3. Double-headed solenoid valve with memory function.
4. Bore with special processing technology, low friction resistance, low starting air pressure, long service life.
5. No need for oil lubrication.
6. With manual device, easy to install and debug
7. A variety of standard voltage levels are available for selection.
8. Can be integrated with the base valve group, saving installation space.1. Direct-acting normally closed type two-port two-position solenoid valve, rapid and sensitive direction change.
9. Lightweight and compact structure.
10. The valve body material is brass, the solenoid coil heat-resistant grade B, the seal material is fluorine rubber (VITON), suitable for a variety of working media.

Flow Characteristics

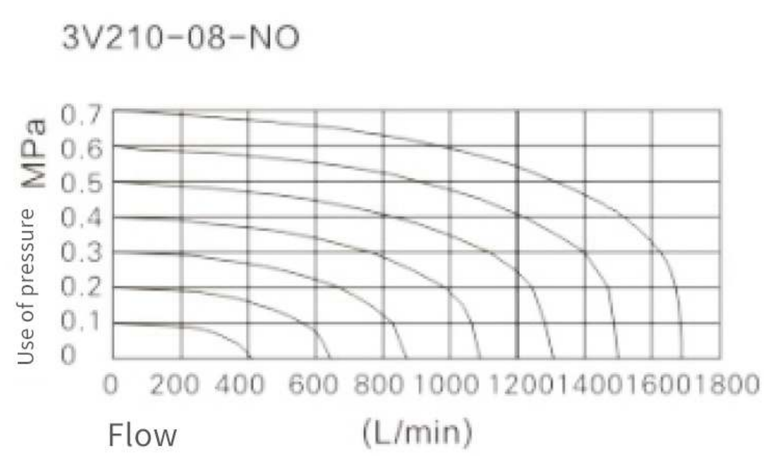

Model number indication method

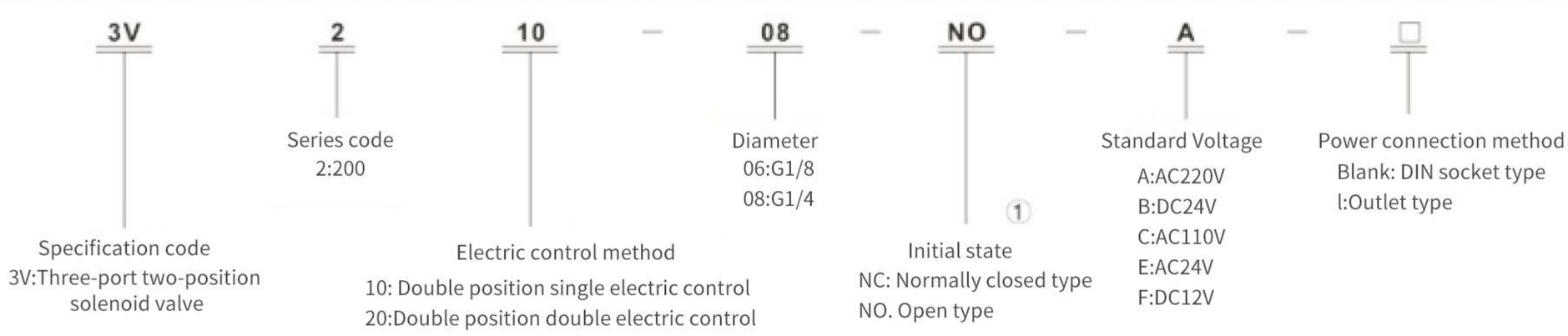

1 Note: Double position double electric control type is not normally open, normally closed, so this code is blank.

Internal structure

3V210

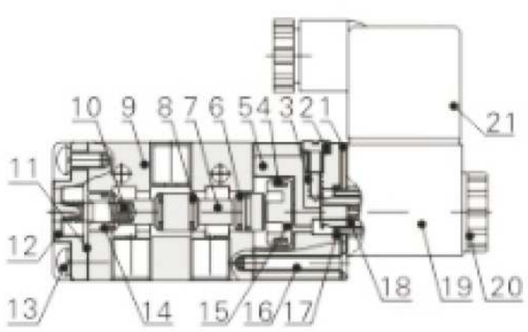

3V220

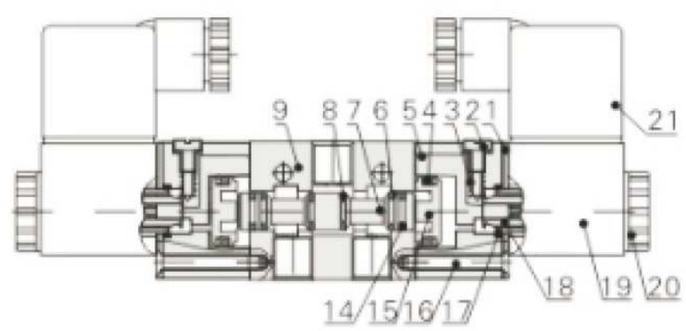

Number	Name	Number	Name	Number	Name
1	Fixed iron piece	8	O-order	15	Piston
2	Manual pin	9	Body	16	Countersunk head screws
3	Spring	10	Spring	17	O-ring
4	Shaped O-ring	11	Check gasket	18	movable iron
5	Guide body	12	Bottom cover	19	Coil
6	Shaped O-ring	13	Round head screws	20	Fixing nut
7	Shaft core	14	Abrasion Resistant Ring	21	Terminal

Dimensional drawing(mm)

3V210DIN socket type

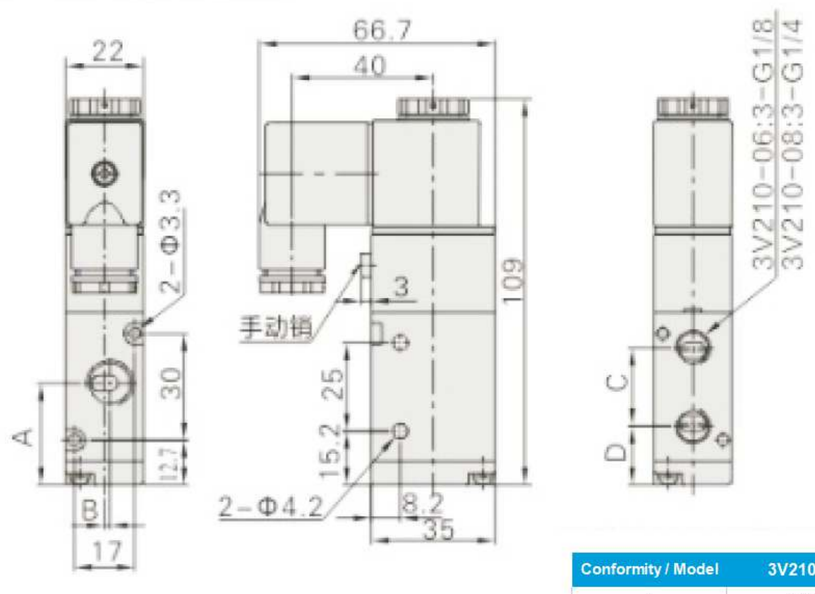

Conformity / Model	3V210-06	3V210-08
A	27.7	28.7
B	0	2
C	22	22.5
D	16.7	16.45

3V210DIN outlet type

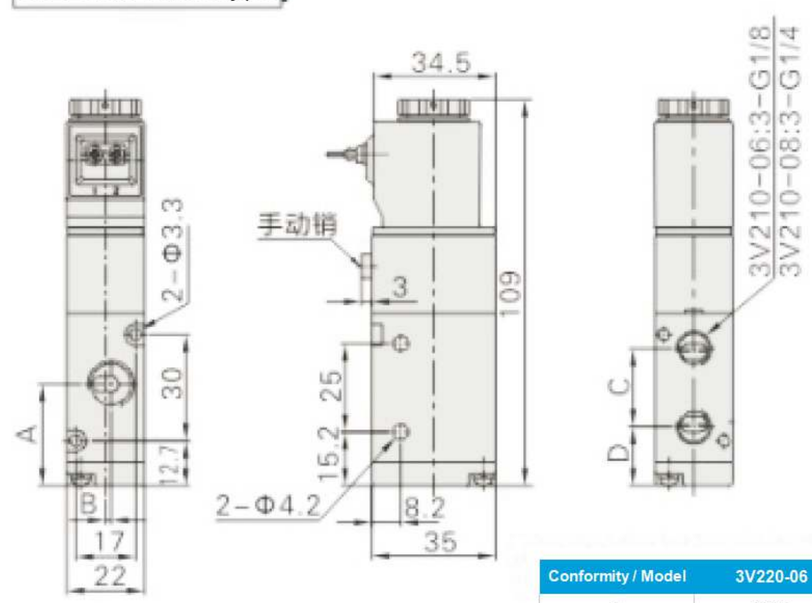

Conformity / Model	3V220-06	3V220-08
A	81.4	82.4
B	0	2
C	22	22.5
D	70.4	70.15

3V220DIN socket type

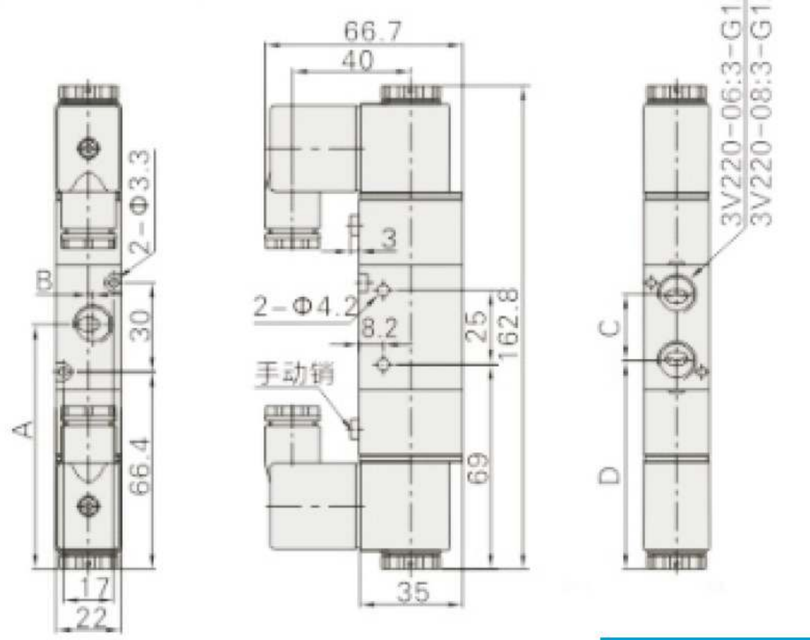

Conformity / Model	3V210-06	3V210-08
A	27.7	28.7
B	0	2
C	22	22.5
D	16.7	16.45

3V220DIN outlet type

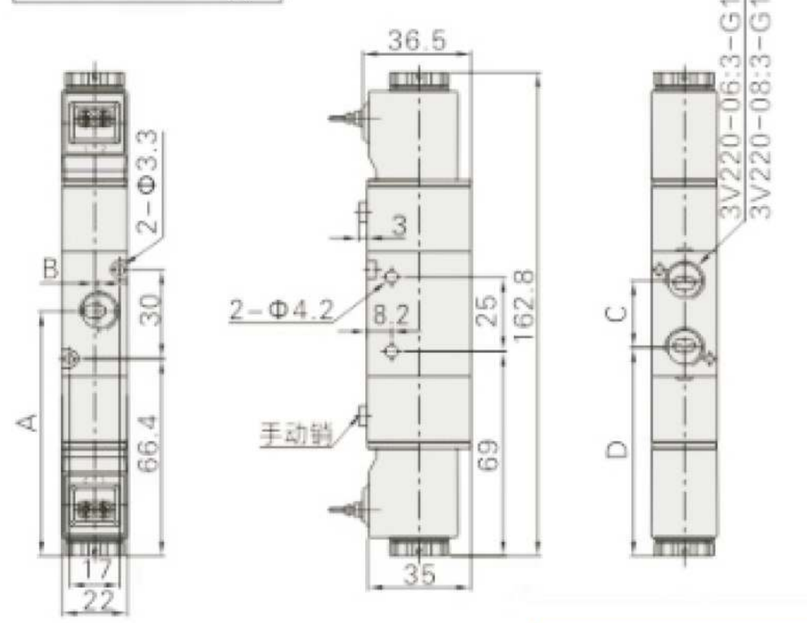

Conformity / Model	3V220-06	3V220-08
A	81.4	82.4
B	0	2
C	22	22.5
D	70.4	70.15

Standard Specification

Model	3V310-08	3V320-08	3V310-10	3V320-10
Working medium	Air (filtered by a 40um or higher filter)			
Action mode	Pilot			
*Pipe diameter	G1/4		G3/8	
Effective cross-sectional area	25mm²（Cv=1.39）		30mm²（Cv=1.67）	
Number of positions	Three mouths and two bits			
**Lubrication	Not required			
Use pressure range	0.15-0.8MPa(21~114psi)			
Guaranteed pressure resistance	1.5Mpa			
Operating temperature	-20-70			
Body material	Aluminum alloy			

"Takeover tooth type has PT, NPT available;
* If there is oil lubrication the middle must not stop, the recommended lubricant is ISOVG32 or the same level with oil

Electrical performance parameters

Item	Specific parameters
Standard Voltage	AC220V、AC110V、AC24V、DC24V、DC12V
Operating voltage range	AC:±15% DC:±10%
Power consumption	AC:6VA DC: 4.8W
Protection level	IP65(DIN40050)
Heat resistance class	Class B
Electrical type	DIN socket type, outlet type
Excitation time	Less than 0.05 seconds
Maximum operation frequency	5 times/sec

* The maximum operating frequency is the no-load condition.

Symbols

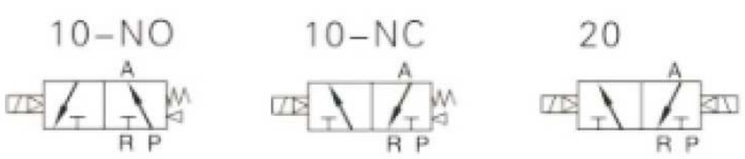

Product Features

1. Pilot method: external and internal optional.
2. Sliding column structure, good sealing, responsive.
3. Double-headed solenoid valve with memory function.
4. Bore with special processing technology, low friction resistance, low starting air pressure, long service life.
5. No need for oil lubrication.
6. With manual device, easy to install and debug
7. A variety of standard voltage levels are available for selection.
8. Can be integrated with the base valve group, saving installation space.1. Direct-acting normally closed type two-port two-position solenoid valve, rapid and sensitive direction change.
2. Lightweight and compact structure.
3. The valve body material is brass, the solenoid coil heat-resistant grade B, the seal material is fluorine rubber (VITON), suitable for a variety of working media.

Flow Characteristics

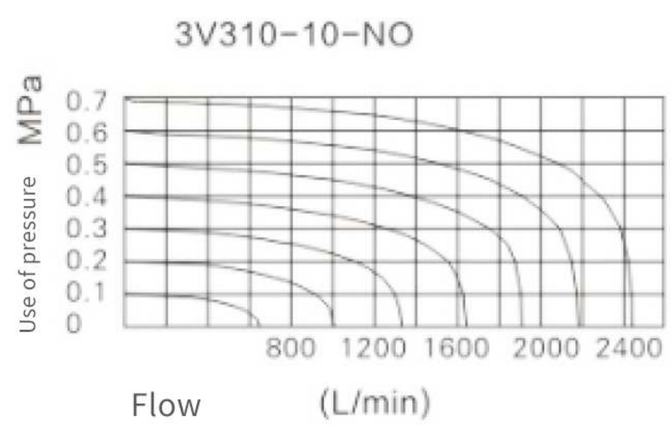

Model number indication method

3V — 2 — 10 — 10 — NO — A — □

- 3V: Specification code
  3V:Three-port two-position solenoid valve
- 2: Series code
  2:200
- 10: Electric control method
  10: Double position single electric control
  20:Double position double electric control
- 10: Diameter
  08:G1/4
  10:G3/8
- NO: Initial state ①
  NC: Normally closed type
  NO. Open type
- A: Standard Voltage
  A:AC220V
  B:DC24V
  C:AC110V
  E:AC24V
  F:DC12V
- □: Power connection method
  Blank: DIN socket type
  l:Outlet type

1 Note: Double position double electric control type is not normally open, normally closed, so this code is blank.

Internal structure

3V310

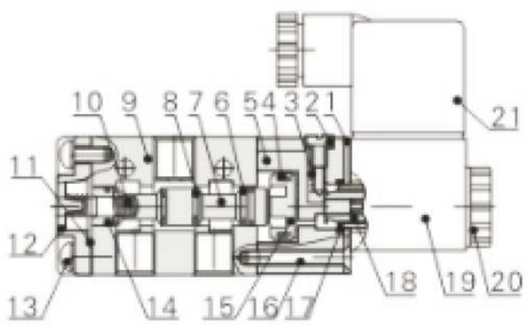

3V320

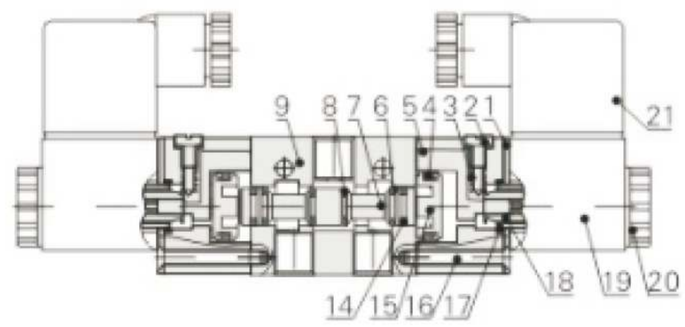

Number	Name	Number	Name	Number	Name
1	Fixed iron piece	8	O-order	15	Piston
2	Manual pin	9	Body	16	Countersunk head screws
3	Spring	10	Spring	17	O-ring
4	Shaped O-ring	11	Check gasket	18	movable iron
5	Guide body	12	Bottom cover	19	Coil
6	Shaped O-ring	13	Round head screws	20	Fixing nut
7	Shaft core	14	Abrasion Resistant Ring	21	Terminal

Dimensional drawing(mm)

3V310DIN socket type

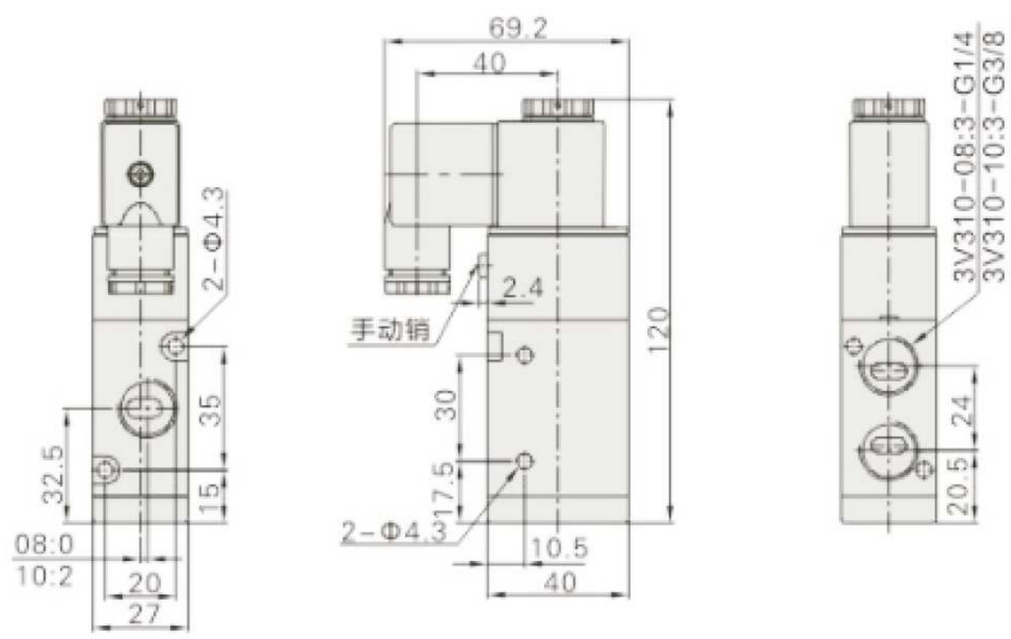

3V310DIN outlet type

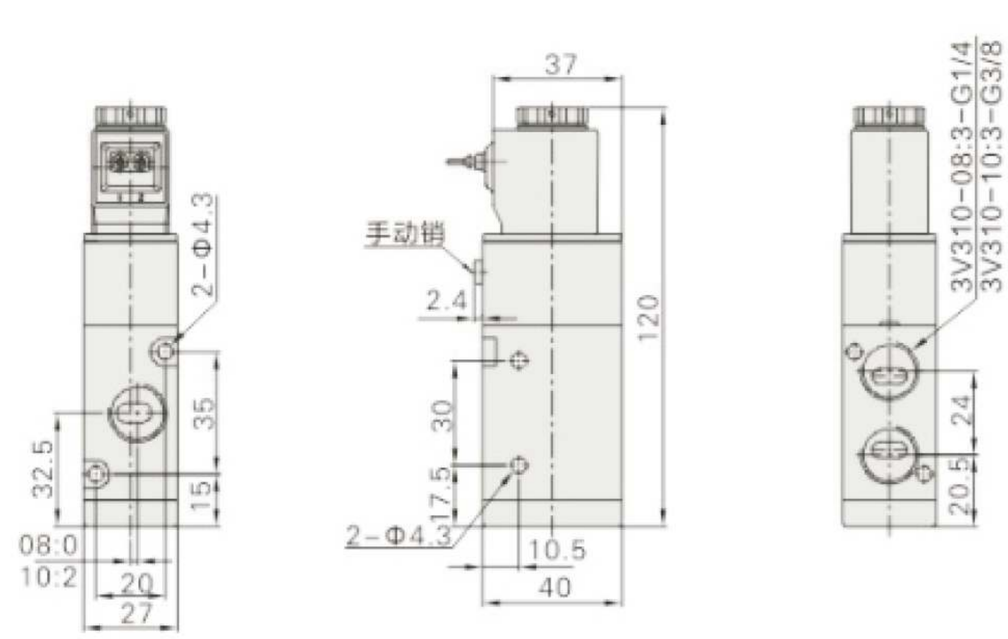

3V320DIN socket type

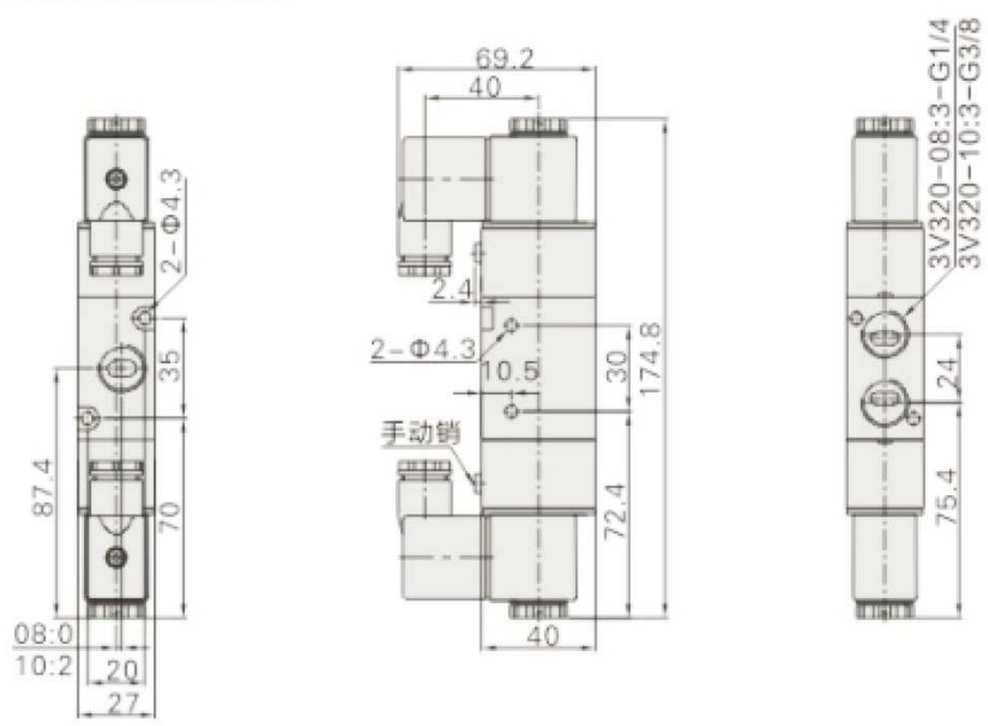

3V320DIN outlet type

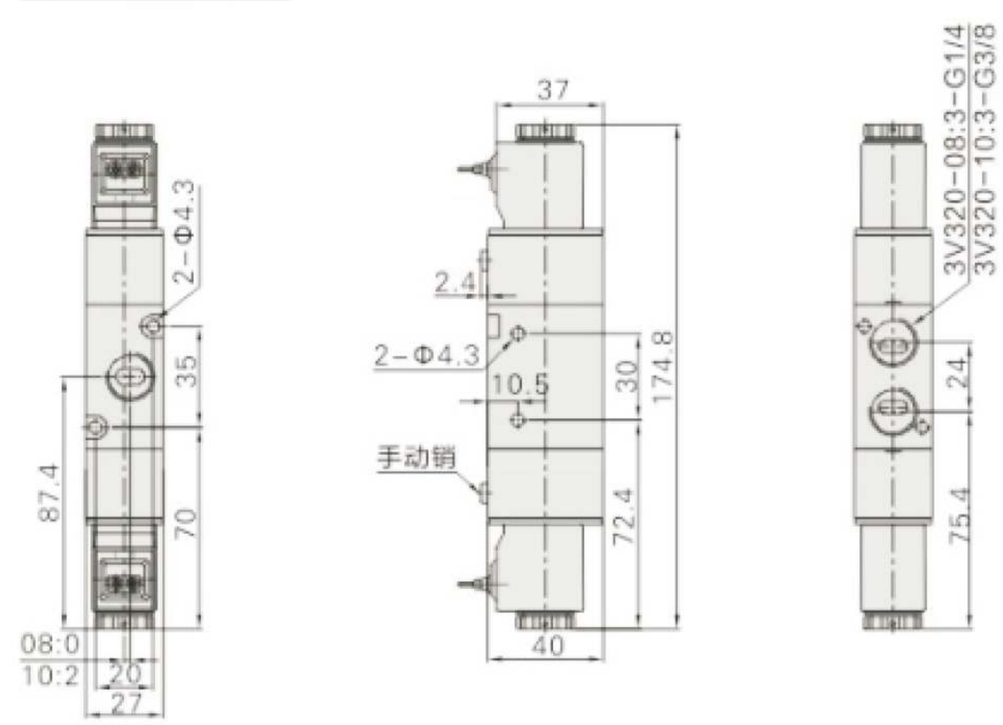

Standard Specification

Item/conformity	3V410-15	3V420-15
Working medium	Air (filtered by 40um filter)	
Action mode	Internal pilot head	
Pipe diameter	Inlet air = Outlet air = G1/2	
Number of positions	Two-position tee	
Operating temperature	-5-60℃(21-114Ps)	
Effective cross-sectional area	50mm²(Cv=2.79)	
Lubrication	Not required	
Use pressure	0.15-0.8Mpa(21-114Psi)	
Max. pressure resistance	1.2Mpa(170Psi)	
Power consumption	AC:6VADC:4.8W	
Protection level	IP65(DIN40050)	
Electrical connection type	Terminal type, wire-out type	
Body material	Aluminum alloy	
Max. operating frequency	3 times/second	
Heat resistance grade	Grade B	
Operating voltage range	-15%-10%	
Excitation time	Less than 0.05 seconds	

Symbols

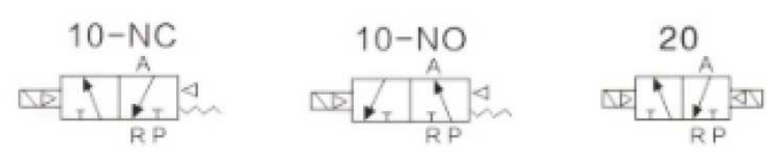

Model number indication method

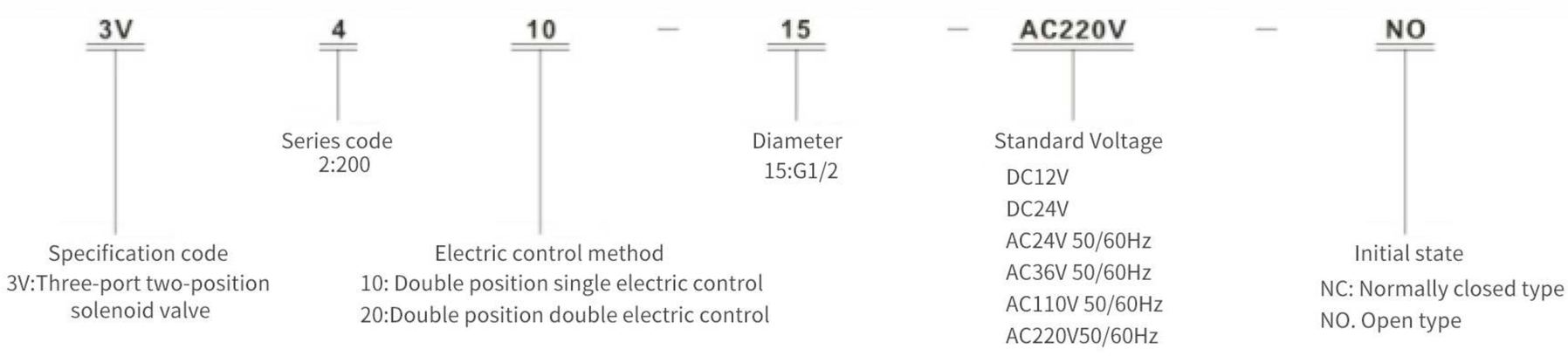

External dimension drawing (mm)

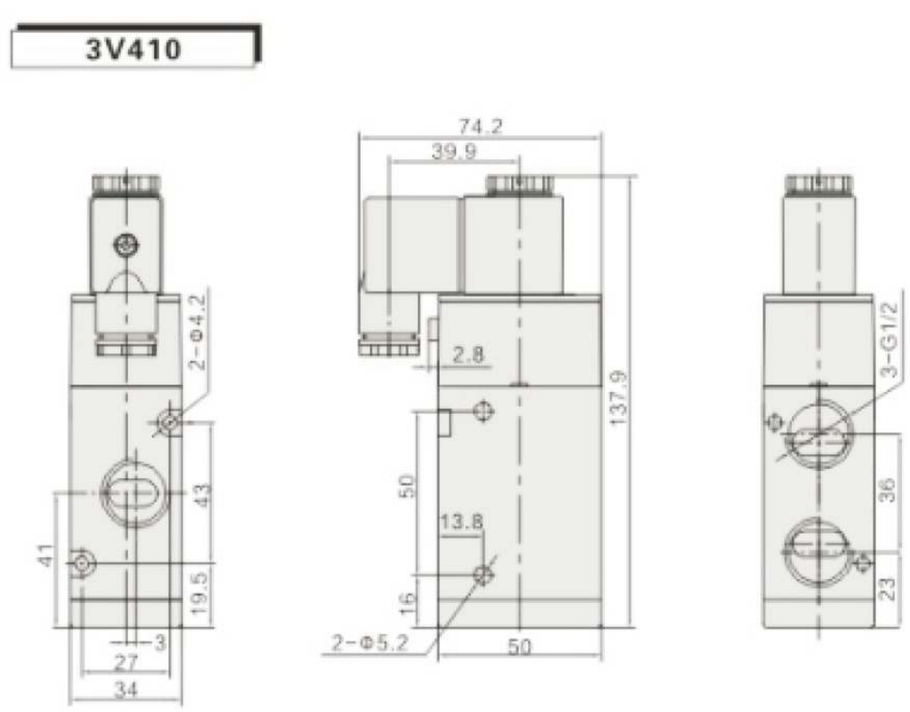

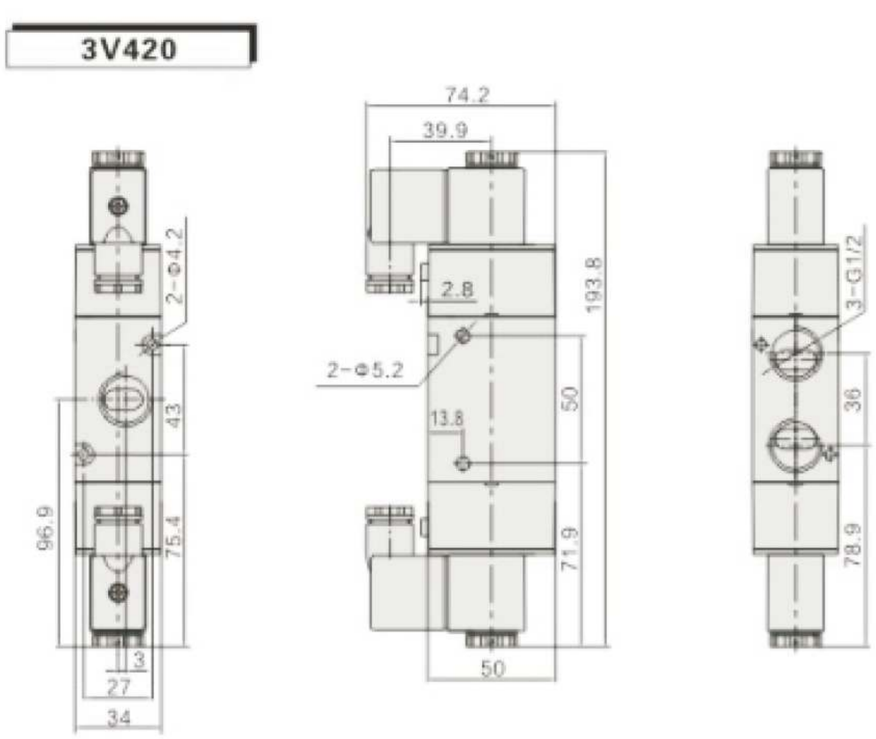

Standard Specification

Model	4V110-M5 4V120-M5	4V130C-M5 4V130E-M5 4V130P-M5	4V110-06 4V120-06	4V130C-06 4V130E-06 4V130P-06
Working medium	Air (filtered by a 40um or higher filter)			
Action mode	Pilot			
*Pipe diameter	Inlet=Outlet=M5		Inlet = Outlet = G1/8	
Effective cross-sectional area	5.5mm²（Cv=0.31）	5.0mm²（Cv=0.28）	12.0mm²（Cv=0.67）	9.0mm²（Cv=0.50）
Number of positions	Five mouths, two places	Five mouths three	Five two	Five three
Use pressure range	0.15-0.8MPa(21~114psi)			
Guaranteed pressure resistance	1.5Mpa(215psi)			
Operating temperature	-20-70			
Body material	Aluminum alloy			
**Lubrication	Not required			
***Maximum movement frequency	5 times/second	3 times/second	5 times/second	3 times/second
Weight	4V110-M5:120g 4V120-M5:175g	200g	4V110-06:120g 4V120-06:175g	200g

*Takeover tooth type with PT, NPT available
**If there is oil lubrication, it cannot be stopped in the middle, and the recommended lubricant is ISOVG32 or the same level of oil.
***Maximum operation frequency is no-load condition.

Electrical performance parameters

Item	Specific parameters
Standard Voltage	AC220V、AC110V、AC24V、DC24V、DC12V
Operating voltage range	AC:±15% DC:±10%
Power consumption	AC:3VA DC: 3W
Protection level	IP65(DIN40050)
Heat resistance class	Class B
Electrical type	DIN socket type, outlet type
Excitation time	Less than 0.05 seconds
Maximum operation frequency	5 times/sec

Symbols

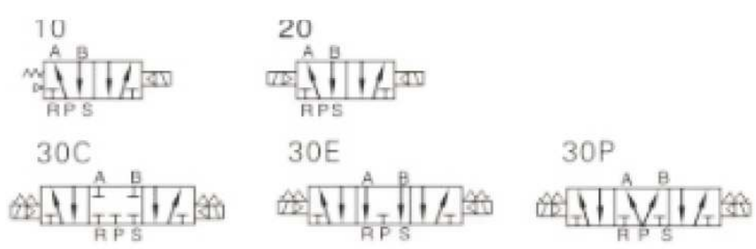

Product Features

1. Pilot method: external and internal optional.
2. Sliding column structure, good sealing, responsive.
3.Three position solenoid valve has three central functions to choose.
4. Double-headed two-position solenoid valve with memory function.
5. The inner bore is processed by special technology, low friction resistance, low starting air pressure, long service life.
6. No need for oil lubrication.
7. Can be integrated with the base valve group, saving installation space.
8. With manual device, easy to install and debug.
9. A variety of standard voltage levels are available for selection

Flow Characteristics

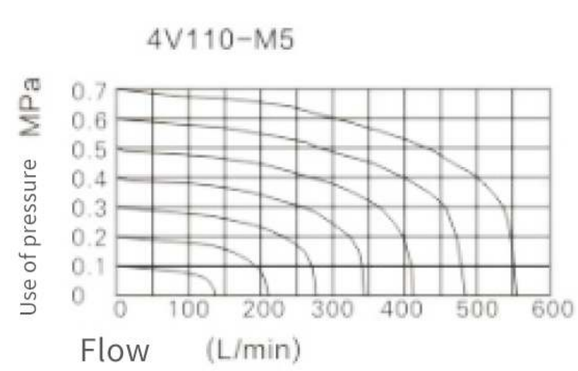

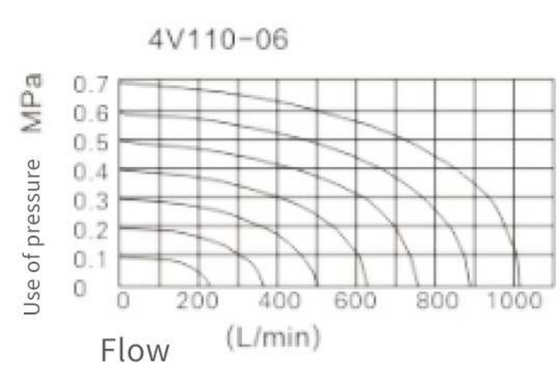

Model number indication method

4V	1	10	–	06	–	A	–	□
Specification code	Series code	Electric control method		Diameter		Standard Voltage		Power connection method
4V:Five-port two-position Five-port three-position solenoid valve	1:100	10:Double position single electric control 20:Double position double electric control 30C:Three position double electric control medium closed type 30E:Three position double electric control middle exhaust type 30P:Three position double electric control medium pressure type		M5:M5 06:G1/8		A: AC220V B:DC24V C:AC110V E:24V F:DC12V		Blank: DIN socket type L:Outlet type

Internal structure

4V110

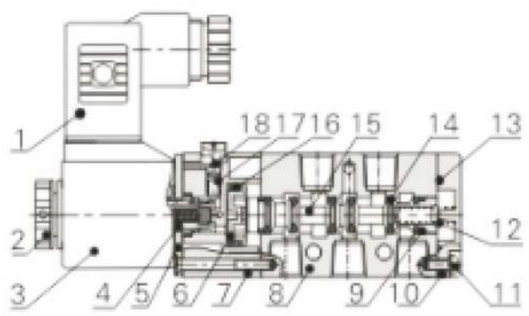

4V120

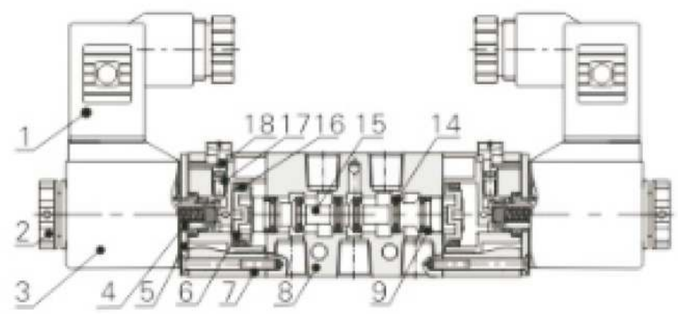

4V130C

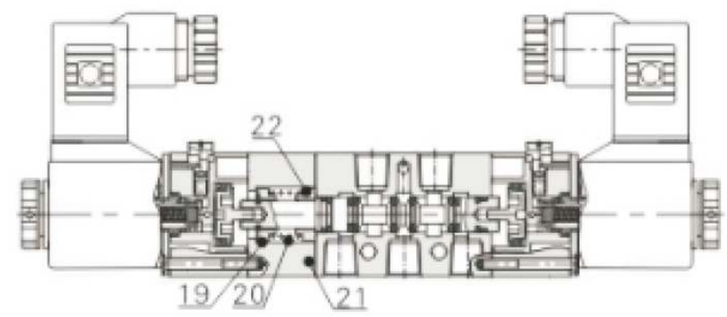

Number	Name	Number	Name	Number	Name	Number	Name	Number	Name
1	Round head screws	5	Body	9	Piston	13	Screw	17	E shaped grommet
2	Spring	6	O-ring	10	Guide body	14	Restore Seat	18	Side cover
3	Bottom cover	7	Shaft core	11	O-ring	15	Restore Spring	19	
4	Stop gasket	8	Wear-resistant ring	12	Round head screws	16	Return seat	20	

Dimensional drawing(mm)

4V110DIN socket type

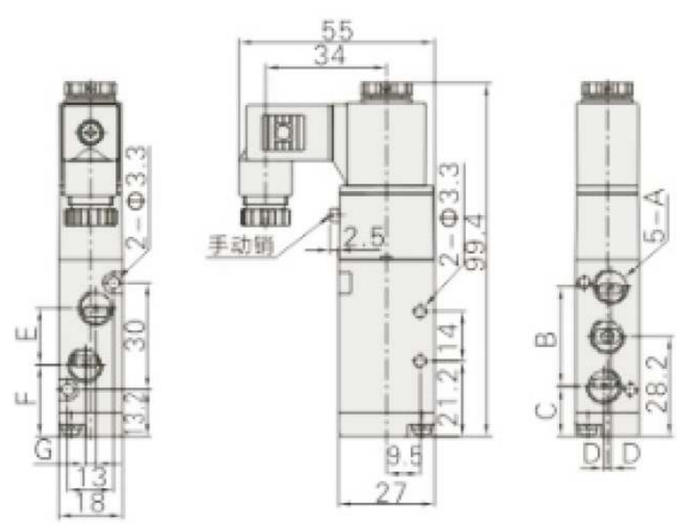

4V110 outlet type

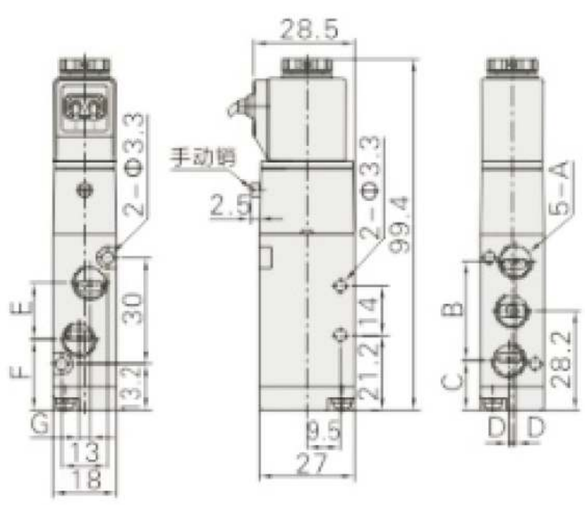

4V120DIN socket type

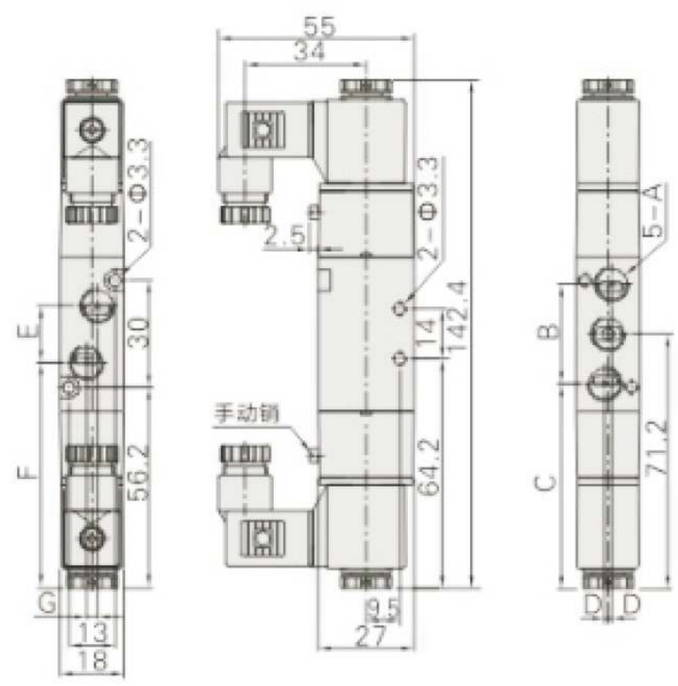

4V120 outlet type

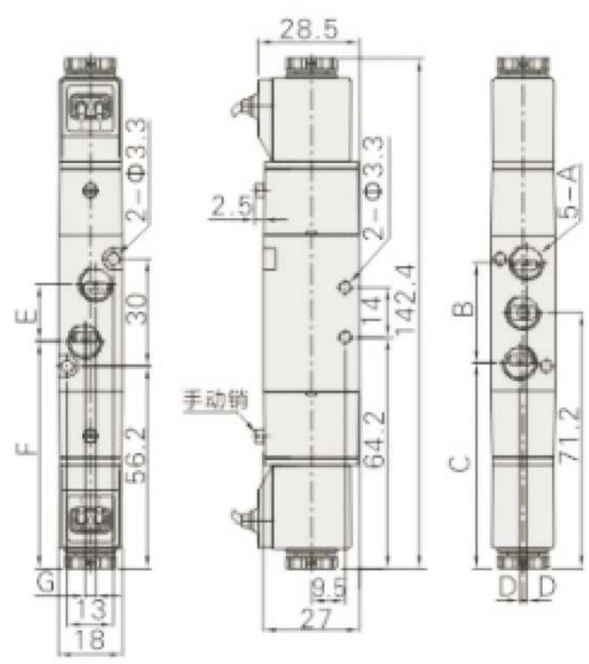

4V130DIN socket type

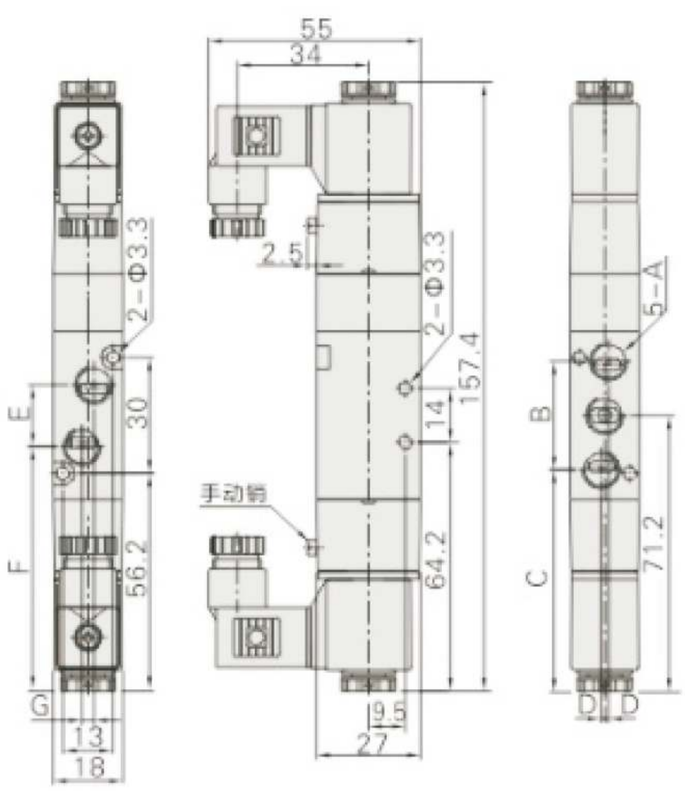

4V130 outlet type

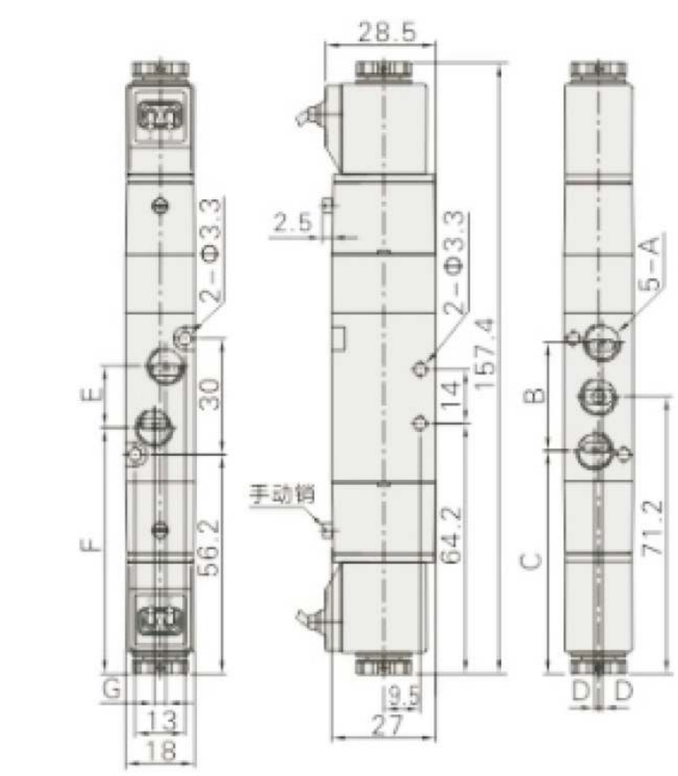

Model \ Symbol	A	B	C	D	E	F	G	Model \ Symbol	A	B	C	D	E	F	G
4V110-M5	M5×0.8	27	14.7	0	14	21.2	0	**4V110-M5**	G1/8	28	57.2	1	16	63.2	3
4V110-06	G1/8	28	14.2	1	16	20.2	3	**4V110-06**	M5×0.8	27	57.7	0	14	64.3	0
4V120-M5	M5×0.8	27	57.7	0	14	64.3	0	**4V120-M5**	G1/8	28	57.2	1	16	63.2	3

Standard Specification

Model	4V210-06 4V220-06	4V230C-06 4V230E-06 4V230P-06	4V210-08 4V220-08	4V230C-08 4V230E-08 4V230P-08
Working medium	Air (filtered by a 40um or higher filter)			
Action mode	Pilot			
*Pipe diameter	Inlet = Outlet = Exhaust = G1/8		Inlet=Outlet=G1/4 Exhaust=G1/8	
Effective cross-sectional area	14mm²（Cv=0.78）	12mm²（Cv=0.67）	16mm²（Cv=0.89）	12mm²（Cv=0.67）
Number of positions	Three mouths and two bits			
**Lubrication	Five mouths, two places	Five mouths three	Five two	Five three
Use pressure range	0.15-0.8MPa(21~114psi)			
Guaranteed pressure resistance	1.5Mpa(215psi)			
Operating temperature	-20-70			
Body material	Aluminum alloy			
**Lubrication	Not required			
***Maximum movement frequency	5 times/second	3 times/second	5 times/second	3 times/second
Weight	4V210-06:220g 4V220-06:320g	360g	4V210-08:220g 4V220-08:320g	360g

*Takeover tooth type with PT, NPT available
**If there is oil lubrication, it cannot be stopped in the middle, and the recommended lubricant is ISOVG32 or the same level of oil.
***Maximum operation frequency is no-load condition.

Electrical performance parameters

Item	Specific parameters
Standard Voltage	AC220V、AC110V、AC24V、DC24V、DC12V
Operating voltage range	AC:±15% DC:±10%
Power consumption	AC:6VA DC: 4.8W
Protection level	IP65(DIN40050)
Heat resistance class	Class B
Electrical type	DIN socket type, outlet type
Excitation time	Less than 0.05 seconds
Maximum operation frequency	5 times/sec

Symbols

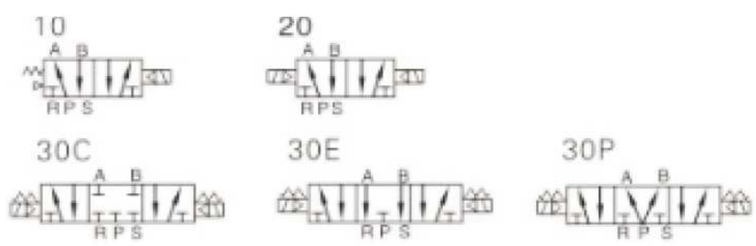

Product Features

1. Pilot method: external and internal optional.
2. Sliding column structure, good sealing, responsive.
3.Three position solenoid valve has three central functions to choose.
4. Double-headed two-position solenoid valve with memory function.
5. The inner bore is processed by special technology, low friction resistance, low starting air pressure, long service life.
6. No need for oil lubrication.
7. Can be integrated with the base valve group, saving installation space.
8. With manual device, easy to install and debug.
9. A variety of standard voltage levels are available for selection

Flow Characteristics

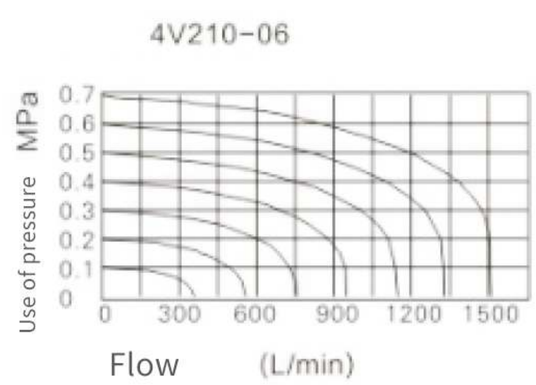

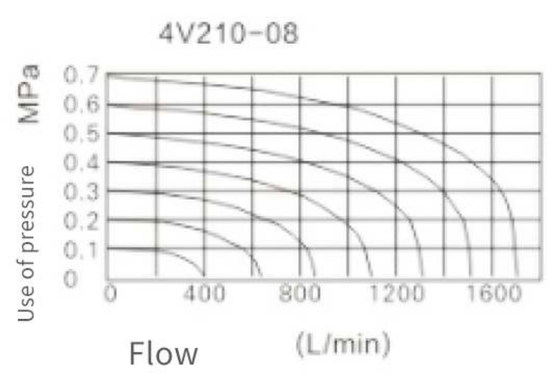

Model number indication method

4V — 2 — 10 — 06 — A — □

- **4V** — Specification code
  4V:Five-port two-position Five-port three-position solenoid valve
- **2** — Series code
  2:200
- **10** — Electric control method
  10:Double position single electric control
  20:Double position double electric control
  30C:Three position double electric control medium closed type
  30E:Three position double electric control middle exhaust type
  30P:Three position double electric control medium pressure type
- **06** — Diameter
  06:G1/8
  08:G184
- **A** — Standard Voltage
  A: AC220V
  B:DC24V
  C:AC110V
  E:24V
  F:DC12V
- **□** — Power connection method
  Blank: DIN socket type
  l:Outlet type

Internal structure

4V210

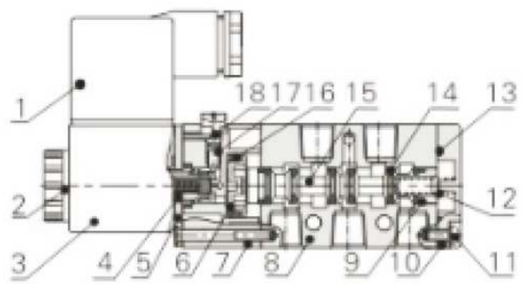

4V220

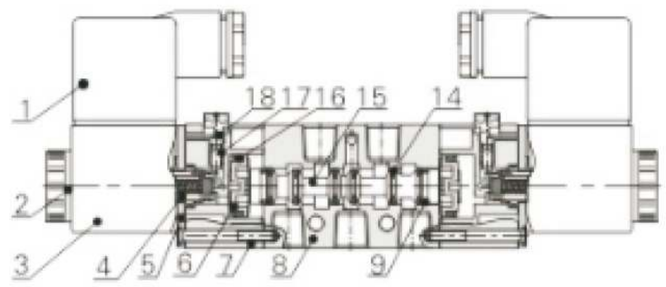

4V230C

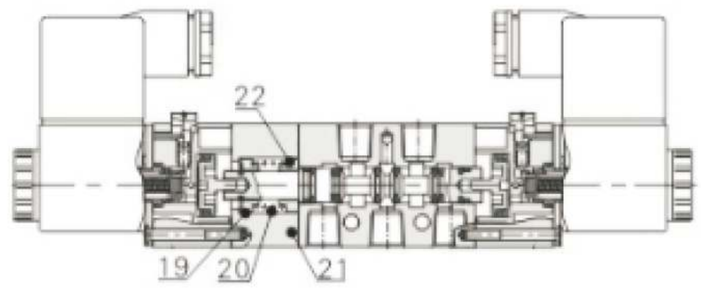

Number	Name	Number	Name	Number	Name	Number	Name	Number	Name
1	Round head screws	5	Body	9	Piston	13	Screw	17	E shaped grommet
2	Spring	6	O-ring	10	Guide body	14	Restore Seat	18	Side cover
3	Bottom cover	7	Shaft core	11	O-ring	15	Restore Spring	19	
4	Stop gasket	8	Wear-resistant ring	12	Round head screws	16	Return seat	20	

Dimensional drawing(mm)

4V210DIN socket type

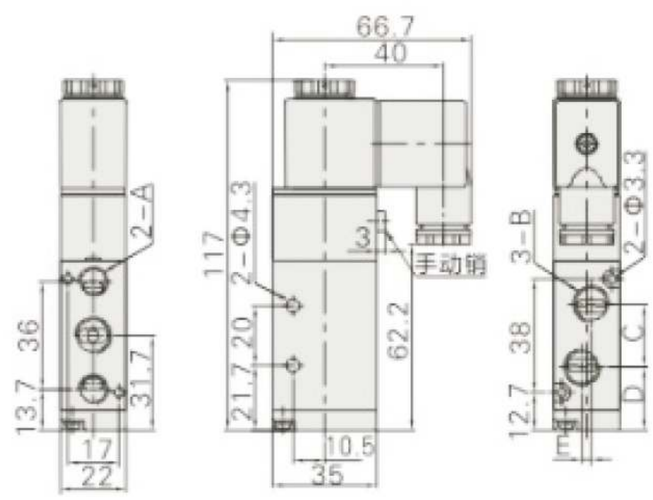

4V210 outlet type

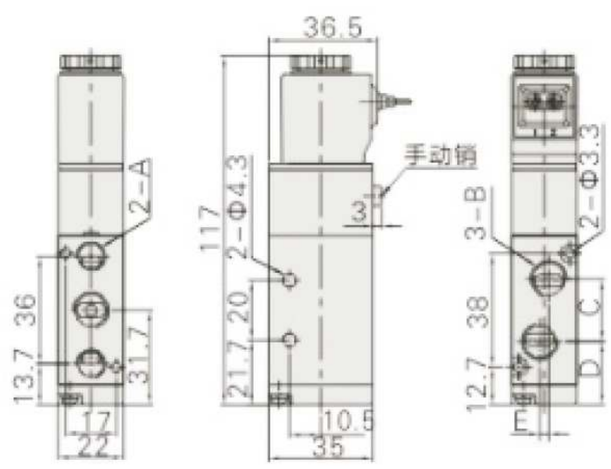

4V220DIN socket type

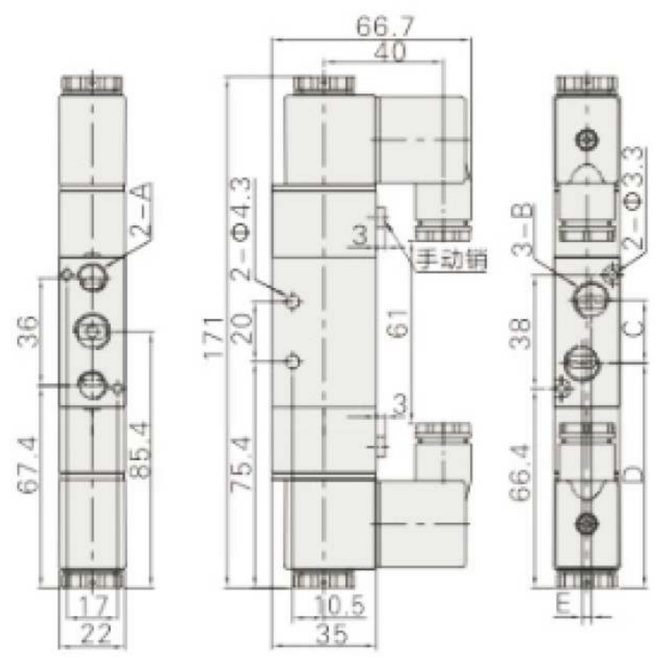

4V220 outlet type

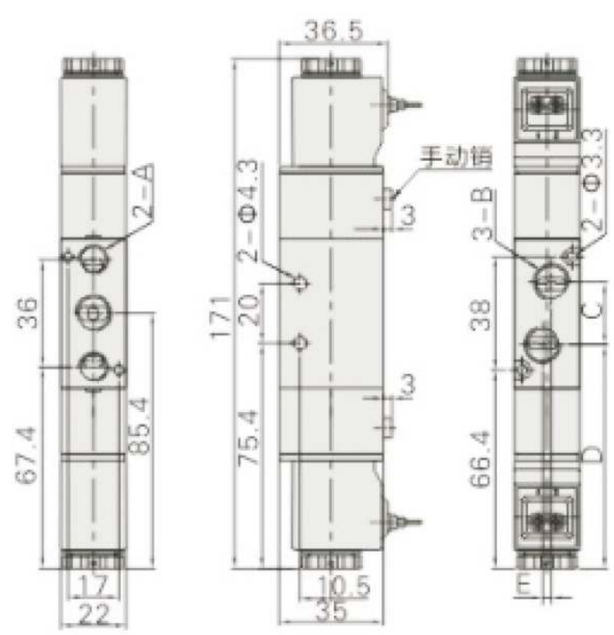

4V230DIN socket type

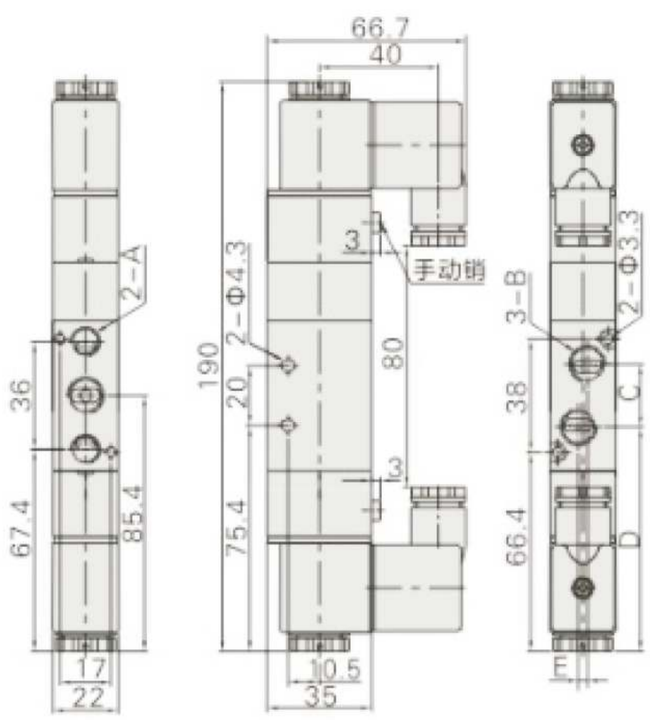

4V230 outlet type

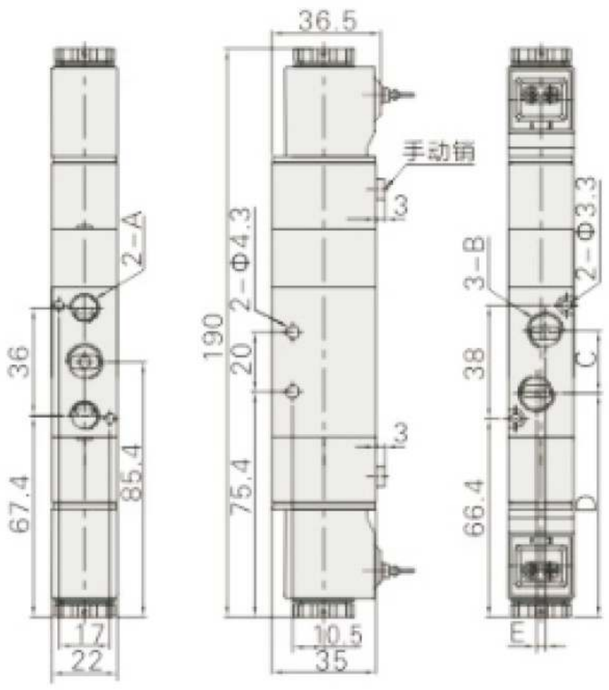

Model \ Symbol	A	B	C	D	E	Model \ Symbol	A	B	C	D	E
4V210-06	G1/8	G1/8	18	22.7	0	**4V220-08**	G1/8	G1/4	21	74.9	3
4V210-08	G1/8	G1/4	21	21.2	3	**4V230-06**	G1/8	G1/8	18	76.4	0
4V220-06	G1/8	G1/8	18	76.4	0	**4V230-08**	G1/8	G1/4	21	74.9	3

Standard Specification

Model	4V310-08 4V320-08	4V330C-08 4V330E-08 4V330P-08	4V310-10 4V320-10	4V330C-10 4V330E-10 4V330P-10
Working medium	Air (filtered by a 40um or higher filter)			
Action mode	Pilot			
*Pipe diameter	Inlet = Outlet = Exhaust = G1/4		Inlet=Outlet=G3/8 Exhaust=G1/4	
Effective cross-sectional area	25mm²（Cv=1.40）	18.0mm²（Cv=1.00）	30.0mm²（Cv=1.68）	18.0mm²（Cv=1.00）
Number of positions	Five mouths, two places	Five mouths three	Five two	Five three
Use pressure range	0.15-0.8MPa(21~114psi)			
Guaranteed pressure resistance	1.5Mpa(215psi)			
Operating temperature	-20-70			
Body material	Aluminum alloy			
**Lubrication	Not required			
***Maximum movement frequency	4 times/second	3 times/second	4 times/second	3 times/second
Weight	4V310-08:310g 4V320-08:400g	450g	4V310-10:310g 4V320-10:400g	450g

*Takeover tooth type with PT, NPT available
**If there is oil lubrication, it cannot be stopped in the middle, and the recommended lubricant is ISOVG32 or the same level of oil.
***Maximum operation frequency is no-load condition.

Electrical performance parameters

Item	Specific parameters
Standard Voltage	AC220V、AC110V、AC24V、DC24V、DC12V
Operating voltage range	AC:±15% DC:±10%
Power consumption	AC:6VA DC: 4.8W
Protection level	IP65(DIN40050)
Heat resistance class	Class B
Electrical type	DIN socket type, outlet type
Excitation time	Less than 0.05 seconds
Maximum operation frequency	5 times/sec

Symbols

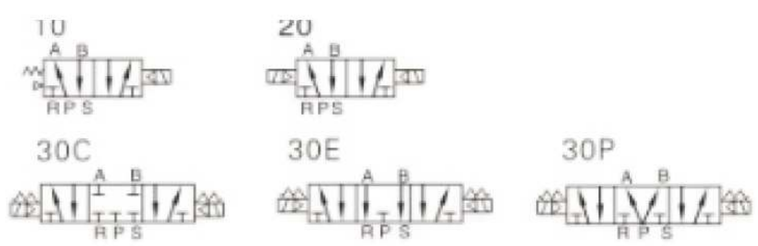

Product Features

1. Pilot method: external and internal optional.
2. Sliding column structure, good sealing, responsive.
3.Three position solenoid valve has three central functions to choose.
4. Double-headed two-position solenoid valve with memory function.
5. The inner bore is processed by special technology, low friction resistance, low starting air pressure, long service life.
6. No need for oil lubrication.
7. Can be integrated with the base valve group, saving installation space.
8. With manual device, easy to install and debug.
9. A variety of standard voltage levels are available for selection

Flow Characteristics

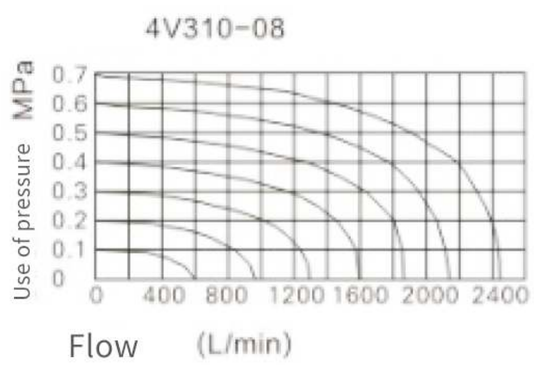

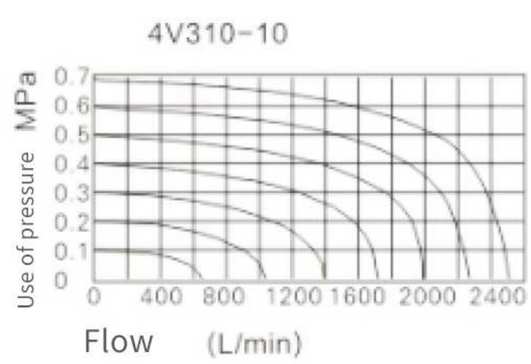

Model number indication method

4V — 3 — 10 — 10 — A — □

Specification code	Series code	Electric control method	Diameter	Standard Voltage	Power connection method
4V:Five-port two-position Five-port three-position solenoid valve	3:300	10:Double position single electric control 20:Double position double electric control 30C:Three position double electric control medium closed type 30E:Three position double electric control middle exhaust type 30P:Three position double electric control medium pressure type	08:G1/4 10:G3/8	A: AC220V B:DC24V C:AC110V E:24V F:DC12V	Blank: DIN socket type l:Outlet type

Internal structure

4V310

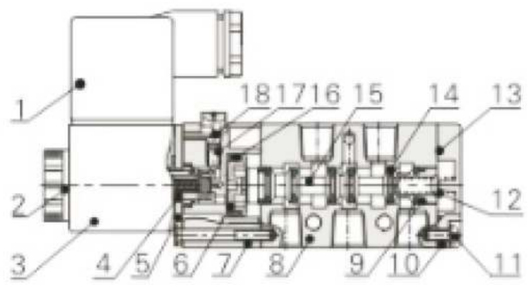

4V320

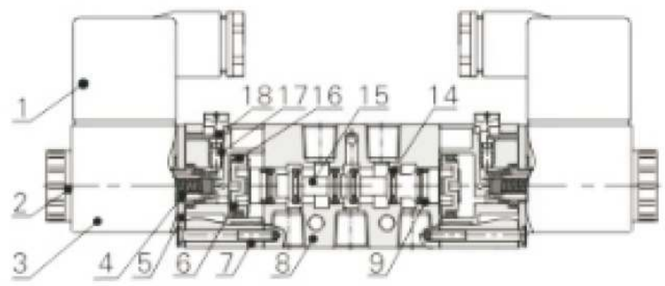

4V330C

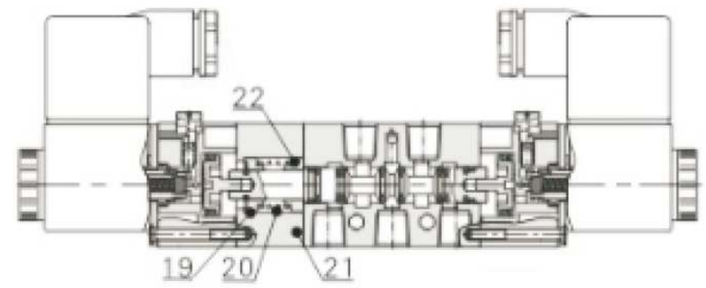

Number	Name	Number	Name	Number	Name	Number	Name	Number	Name
1	Round head screws	5	Body	9	Piston	13	Screw	17	E shaped grommet
2	Spring	6	O-ring	10	Guide body	14	Restore Seat	18	Side cover
3	Bottom cover	7	Shaft core	11	O-ring	15	Restore Spring	19	
4	Stop gasket	8	Wear-resistant ring	12	Round head screws	16	Return seat	20	

Dimensional drawing(mm)

4V310DIN socket type

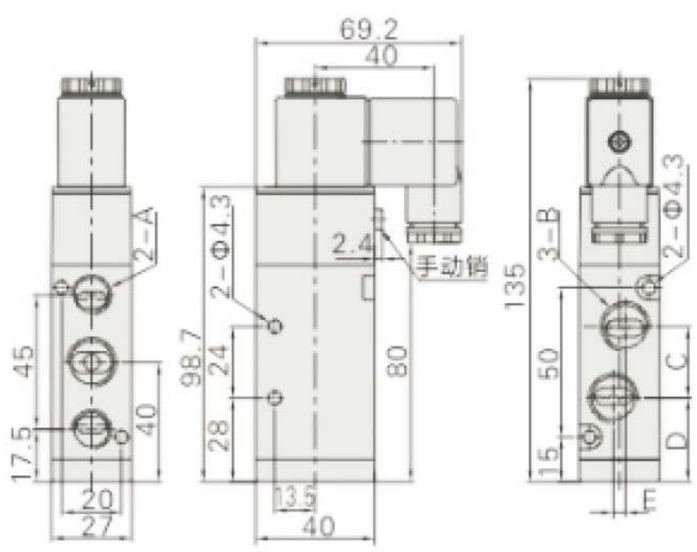

4V310 outlet type

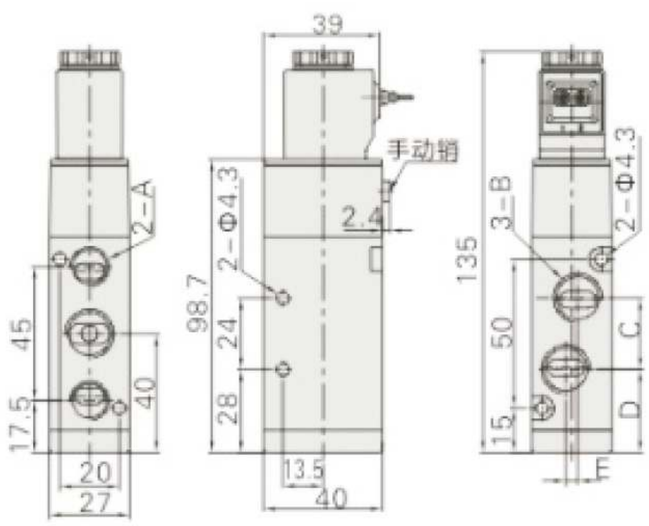

4V320DIN socket type

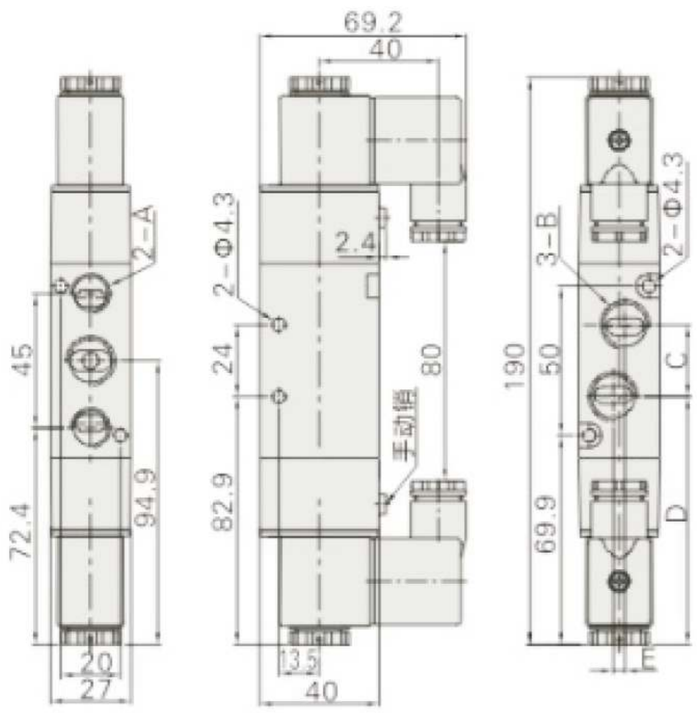

4V320 outlet type

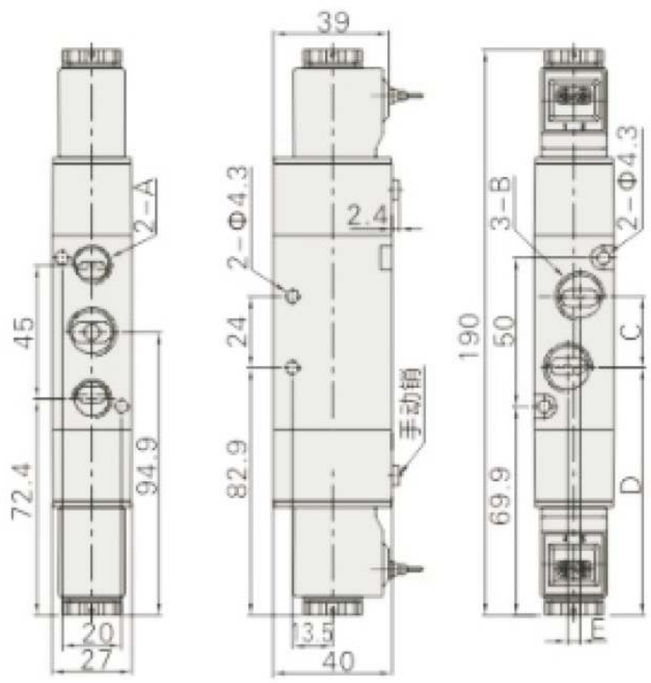

4V330DIN socket type

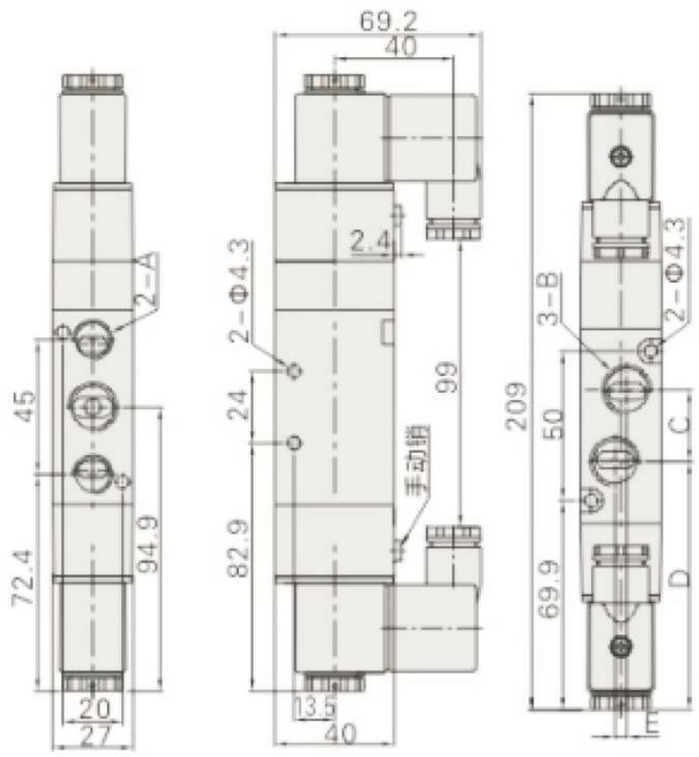

4V330 outlet type

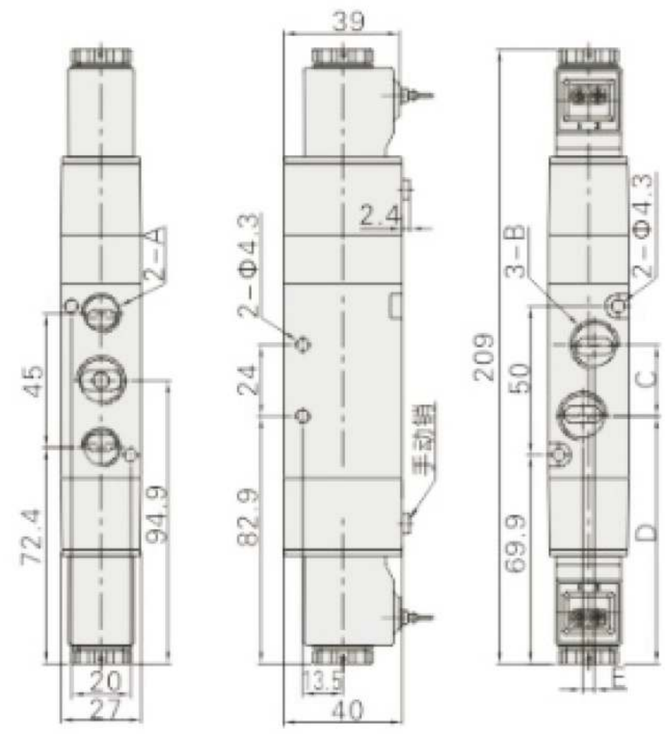

Model \ Symbol	A	B	C	D	E	Model \ Symbol	A	B	C	D	E
4V310-08	G1/4	G1/4	22	29	0	**4V320-10**	G1/4	G3/8	24	82.9	4
4V310-10	G1/4	G3/8	24	28	4	**4V330-08**	G1/4	G1/4	22	83.9	0
4V320-08	G1/4	G1/4	22	83.9	0	**4V330-10**	G1/4	G3/8	24	82.9	4

Standard Specification

Model	4V410-15	4V420-15	4V430C-15	4V430E-15	4V430P-15
Working medium	Air (filtered by a 40um or higher filter)				
Action mode	Pilot				
*Pipe diameter	Inlet = Outlet = Exhaust = G1/2				
Effective cross-sectional area	50mm²（Cv=2.79）		30.0mm²（Cv=1.68）		
Number of positions	Five mouths and two seats		Five mouths of three		
Use pressure range	0.15-0.8MPa(21~114psi)				
Guaranteed pressure resistance	1.5Mpa(215psi)				
Operating temperature	-20-70				
Body material	Aluminum alloy				
**Lubrication	Not required				
***Maximum movement frequency	3 times/second				
Weight	590g	720g	770g		

Electrical performance parameters

Item	Specific parameters
Standard Voltage	AC220V、AC110V、AC24V、DC24V、DC12V
Operating voltage range	AC:±15% DC:±10%
Power consumption	AC:6VA DC: 4.8W
Protection level	IP65(DIN40050)
Heat resistance class	Class B
Electrical type	DIN socket type, outlet type
Excitation time	Less than 0.05 seconds
Maximum operation frequency	5 times/sec

Symbols

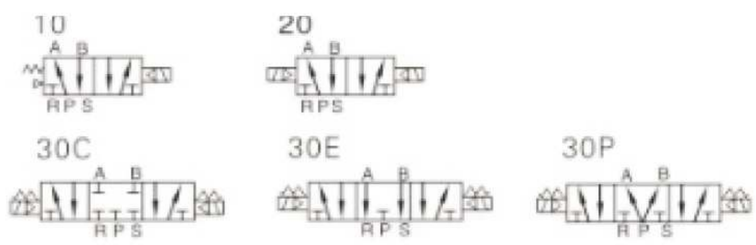

Product Features

1. Pilot method: external and internal optional.
2. Sliding column structure, good sealing, responsive.
3.Three position solenoid valve has three central functions to choose.
4. Double-headed two-position solenoid valve with memory function.
5. The inner bore is processed by special technology, low friction resistance, low starting air pressure, long service life.
6. No need for oil lubrication.
7. Can be integrated with the base valve group, saving installation space.
8. With manual device, easy to install and debug.
9. A variety of standard voltage levels are available for selection

Flow Characteristics

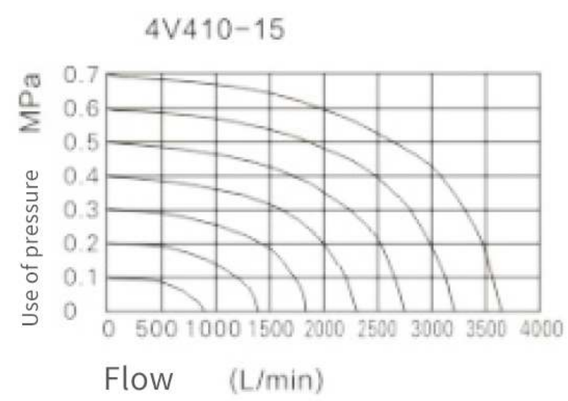

Model number indication method

4V	4	10	—	15	—	A	—	□
Specification code	Series code	Electric control method		Diameter		Standard Voltage		Power connection method
4V:Five-port two-position Five-port three-position solenoid valve	3:300	10:Double position single electric control 20:Double position double electric control 30C:Three position double electric control medium closed type 30E:Three position double electric control middle exhaust type 30P:Three position double electric control medium pressure type		15:1/2		A: AC220V B:DC24V C:AC110V E:24V F:DC12V		Blank: DIN socket type l:Outlet type

Internal structure

4V410

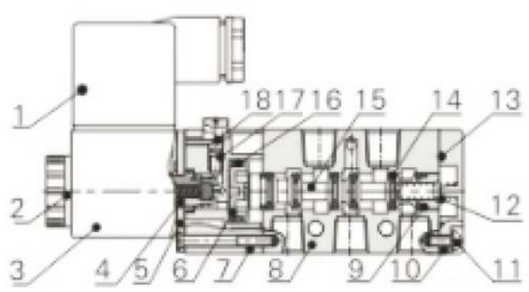

4V420

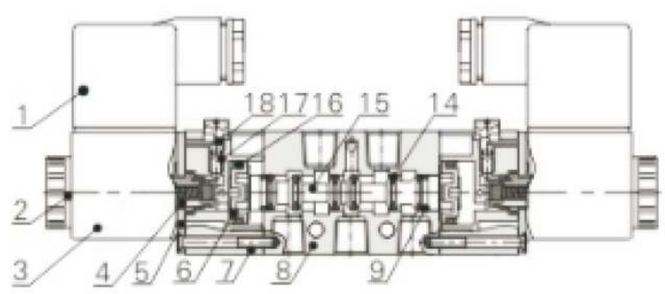

4V430C

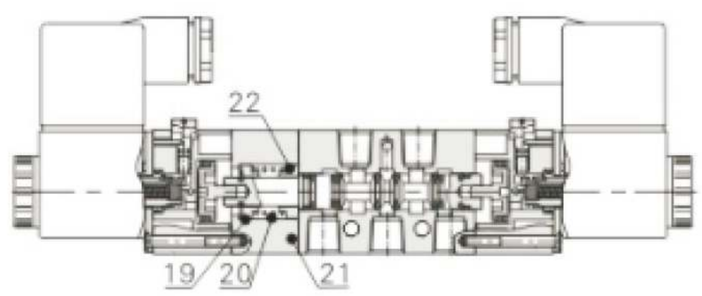

Number	Name	Number	Name	Number	Name	Number	Name	Number	Name	Number	Name
1	Connector	5	Fixed iron piece	9	Wear Resistant Ring	13	Stop leak pad	17	Spring	21	side cover
2	Fixing nut	6	Piston	10	Bottom cover	14	O-ring	18	Manual pin	22	Restore seat
3	Coil	7	Guide body	11	Screws	15	Shaft core	19	Restore Seat		
4	movable iron	8	Body	12	Spring	16	Shaped O-ring	20	Spring		

Dimensional drawing(mm)

4V410DIN socket type

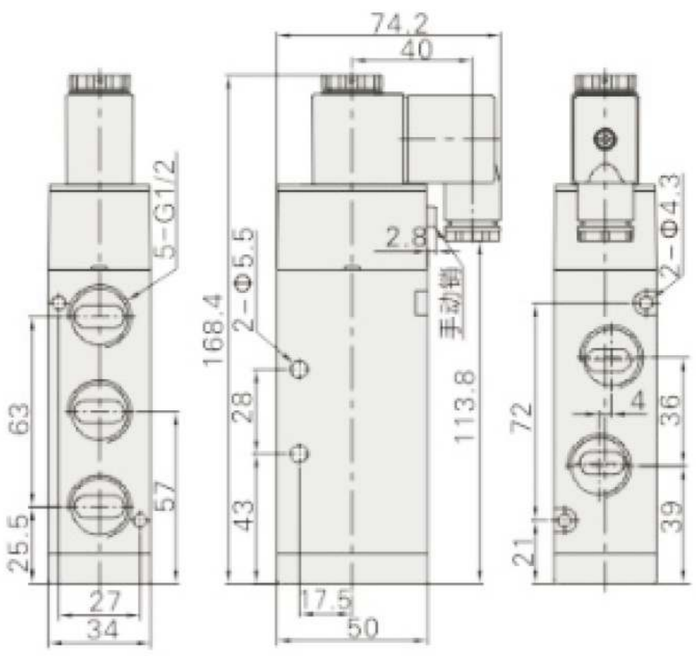

4V410 outlet type

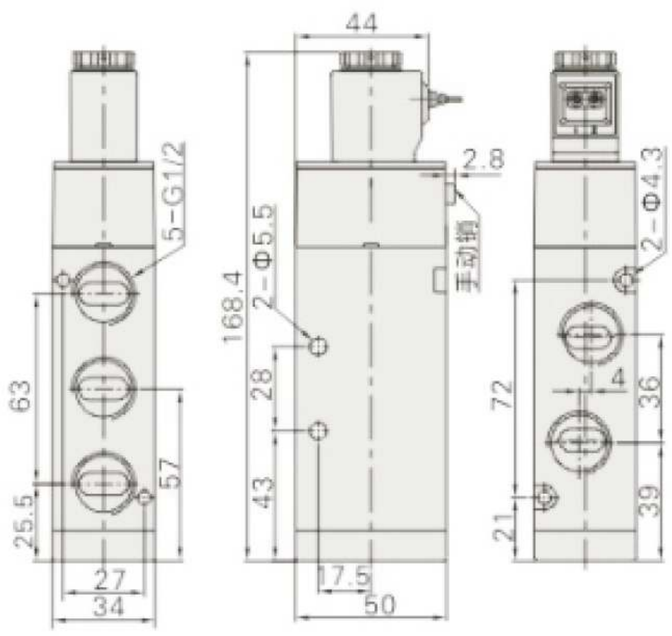

4V420DIN socket type

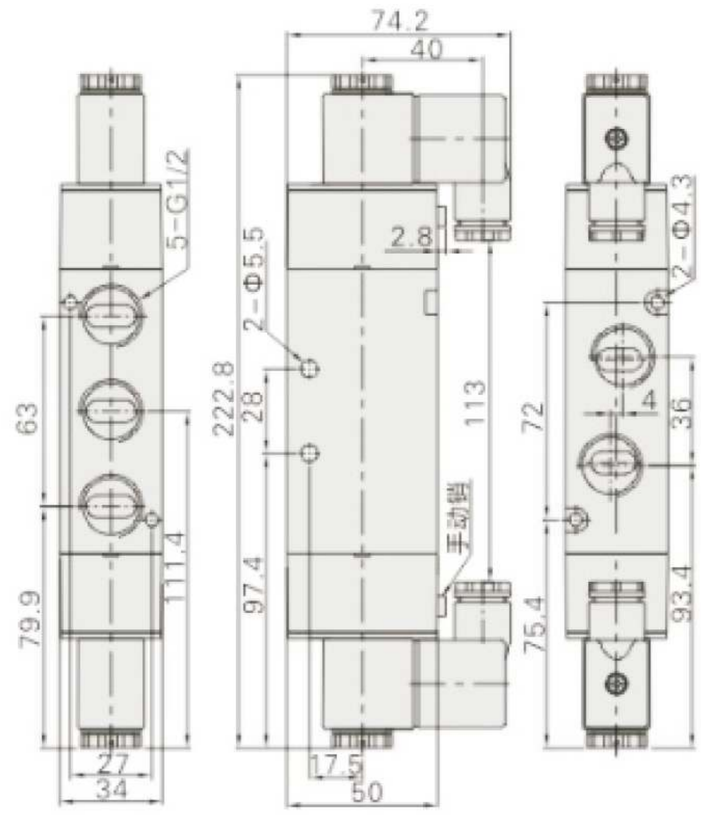

4V420 outlet type

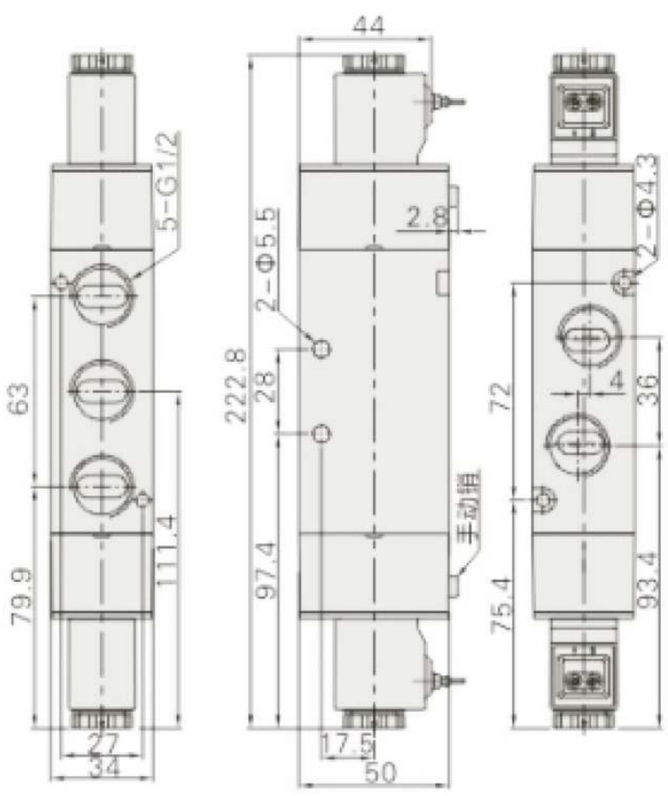

4V430DIN socket type

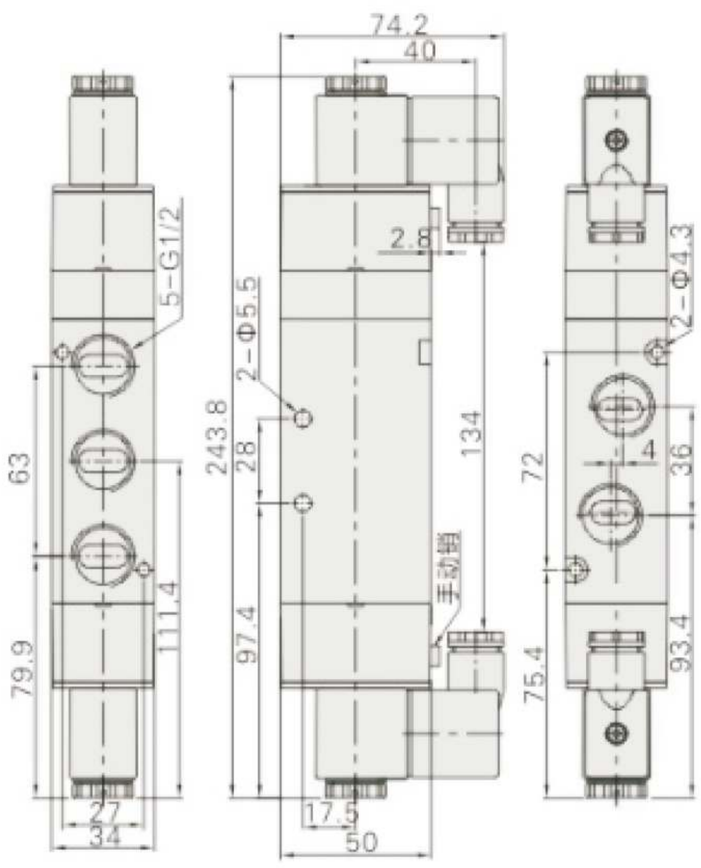

4V430 outlet type

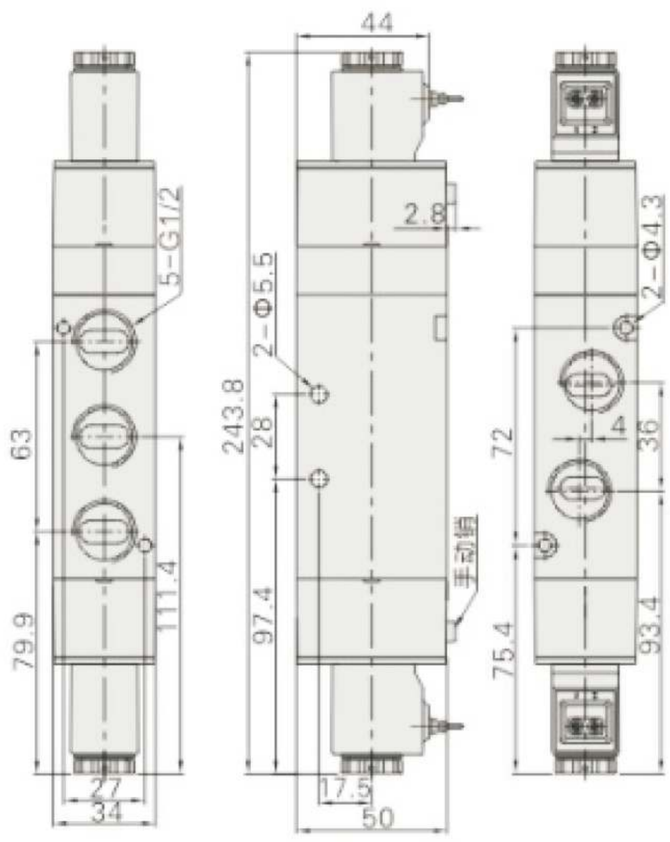

Standard Specification

Model	4M110-M5 4M120-M5	4M110-06 4M120-06	4M210-06 4M220-06	4M210-08 4M220-08	4M310-08 4M320-08	4M310-10 4M320-10
Working medium	Air (filtered by a 40um or higher filter)					
Action mode	Pilot					
*Pipe diameter	Intake = Exhaust =M5	Intake = Exhaust =G1/8"	Intake = Exhaust =G1/8"	Intake = Exhaust =G1/8"	Intake = Exhaust =G1/4"	Intake = PT3/8 Exhaust = G1/4
Effective cross-sectional area	5.5mm²（Cv=0.31）	12mm²（Cv=0.67）	14mm²（Cv=0.78）	16mm²（Cv=0.89）	25mm²（Cv=1.4）	30mm²（Cv=1.68）
Number of positions	Five mouths and two seats					
Use pressure range	0.15-0.8MPa(21~114psi)					
Guaranteed pressure resistance	1.5Mpa(215psi)					
Operating temperatur	-20-70					
Body material	Aluminum alloy					
**Lubrication	Not required					
***Maximum movement frequency	5 times/second				4 times/second	
Weight	4M110:120	4M120:175	4M210:220	4M220:320	4M310:320	4M320:400

Symbols

Electrical performance parameters

Excitation time	4M110	4M120	4M210	4M220	4M310	4M320
Standard Voltage	AC220V、AC110V、AC24V、DC24V、DC12V					
Operating voltage rar	AC:±15% DC:±10%					
Power consumption	AC:3VA DC: 3W			AC:6VA DC: 4.8W		
Protection level	IP65(DIN40050)					
Heat resistance class	Class B					
Electrical type	DIN socket type, outlet type					
Excitation time	Less than 0.05 seconds					

Product Features

1. Pilot method: external and internal optional.
2. Sliding column structure, good sealing, responsive.
3.Three position solenoid valve has three central functions to choose.
4. Double-headed two-position solenoid valve with memory function.
5. The inner bore is processed by special technology, low friction resistance, low starting air pressure, long service life.
6. No need for oil lubrication.
7. Can be integrated with the base valve group, saving installation space.
8. With manual device, easy to install and debug.
9. A variety of standard voltage levels are available for selection

Flow Characteristics

Please refer to the same model 4V series solenoid valve.

Model number indication method

4M	3	10	–	10	–	A	–	□
Specification code	Series code	Electric control method		Catch pipe diameter		Standard Voltage		Power connection method
4M.Five-port two-position solenoid valve (NAMUR type)	1:100 2:200 3:300	10:Double position single electric control 20:Double position double electric control		M5:M5 06:G1/8 08:G1/4 10:G3/8		A: AC220V B:DC24V C:AC110V E:24V F:DC12V		Blank: DIN socket type l:Outlet type

Internal structure

Single electric control type

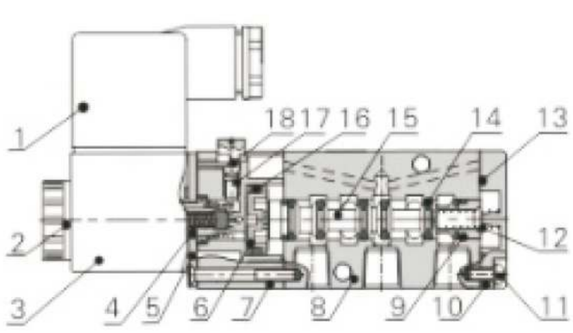

Dual electric control type

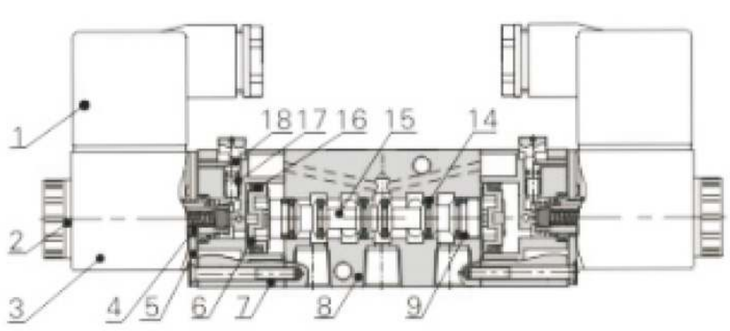

Number	Name	Number	Name
1	Connector	10	Bottom cover
2	Fixing nut	11	Screw
3	Coil	12	Spring
4	movable iron	13	Check washers
5	Fixed iron piece	14	O-ring
6	Live race	15	Shaft core
7	Lead body	16	Shaped O-ring
7	Body	17	Spring
9	Wear-resistant ring	18	Hand pin

Dimensional drawing(mm)

4M110DIN socket type

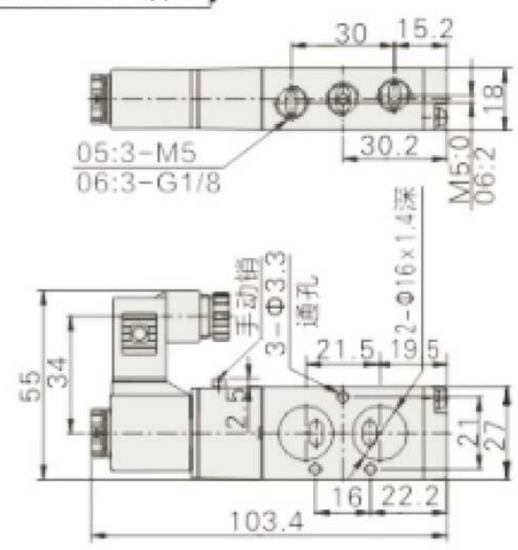

4M110 outlet type

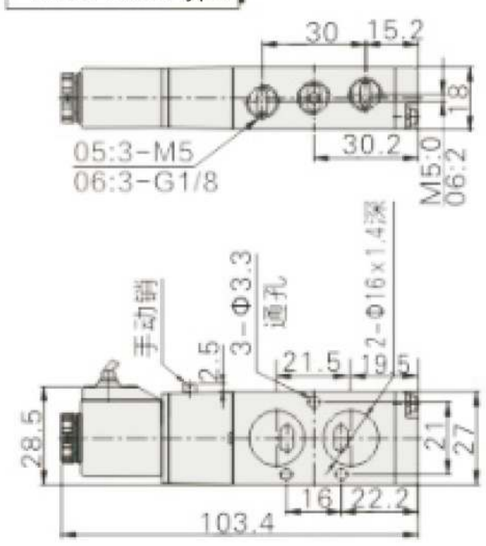

4M310DIN socket type

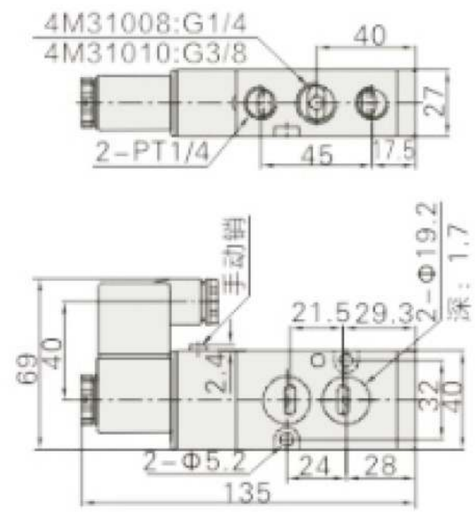

4M120DIN socket type

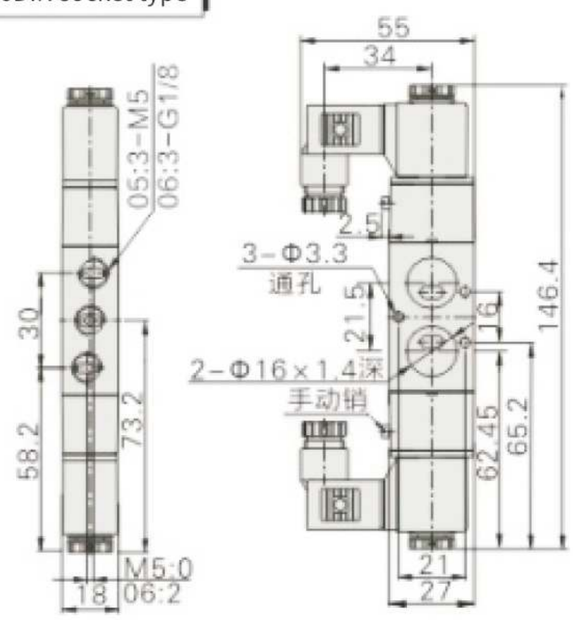

4M120 outlet type

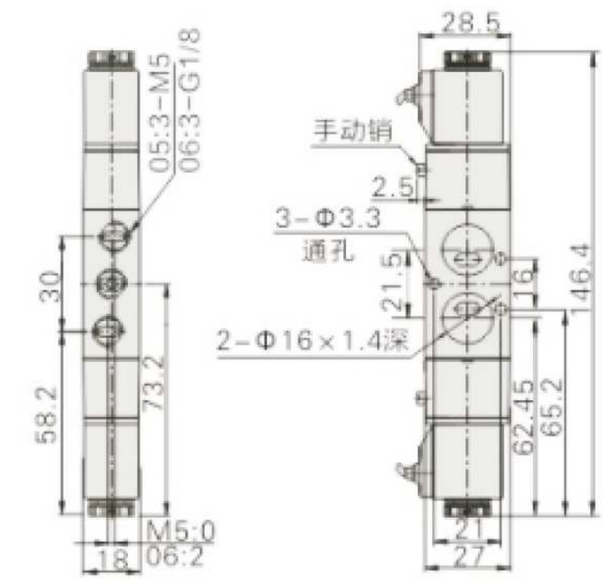

4M310 outlet type

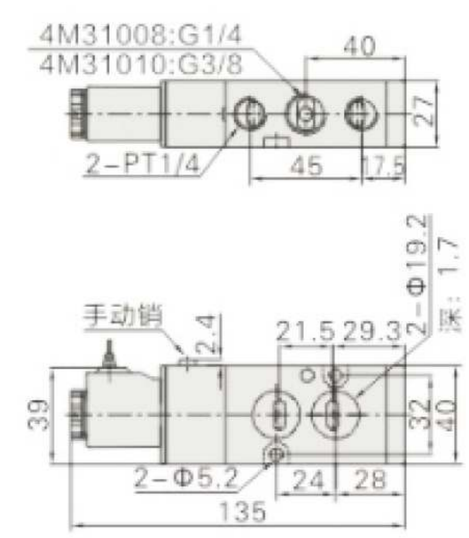

4M210DIN socket type

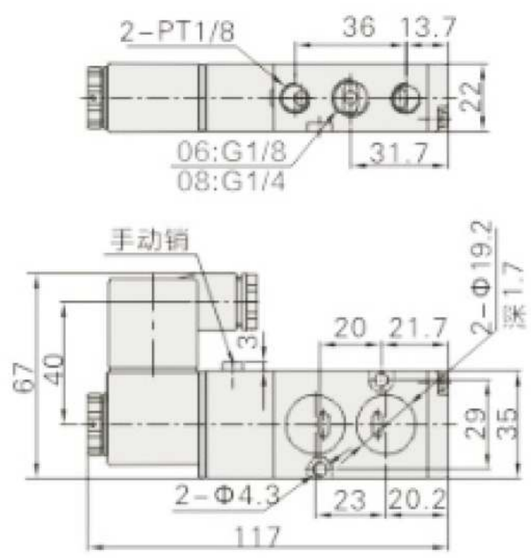

4M210 outlet type

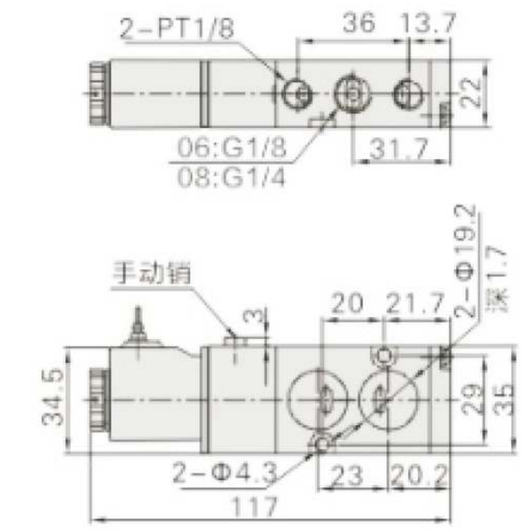

4M320DIN socket type

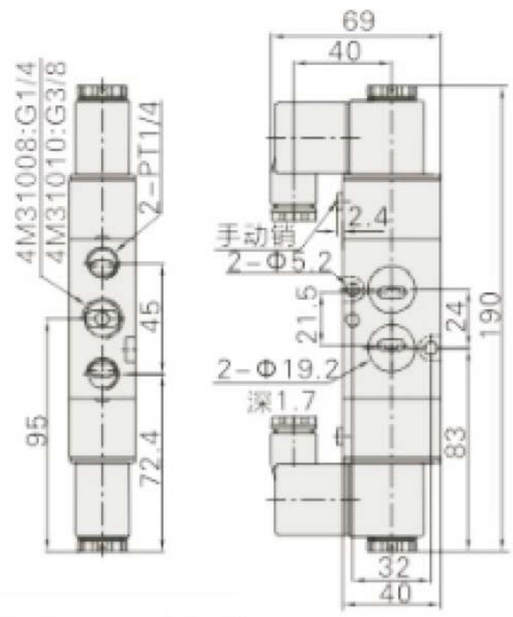

4M220DIN socket type

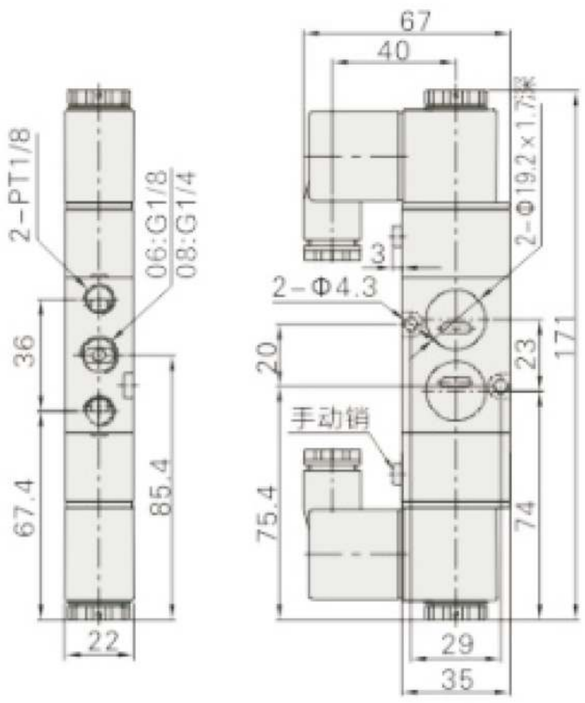

4M220 outlet type

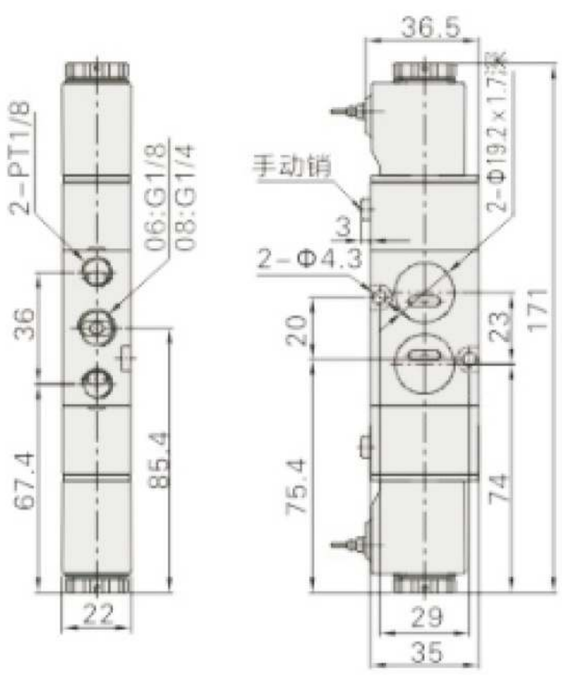

4M320 outlet type

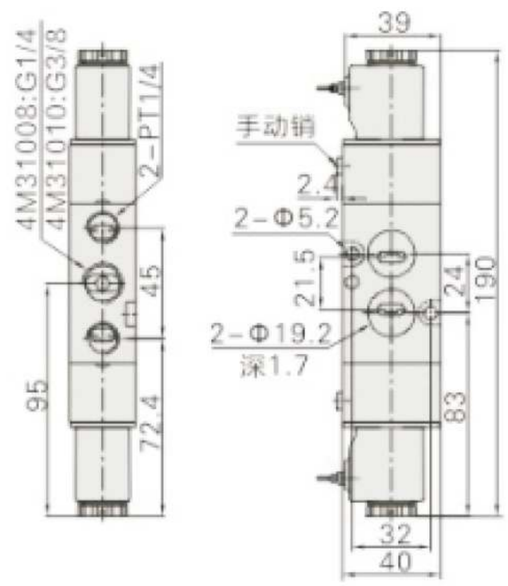

Specifications and options

Item/base model	3V110M	3V200M	3V300M
Working medium	Air (filtered by a 40um or higher filter)		
Working temperature ℃	-20-70		
Applicable valve body series	3V110 Series	3V200 Series	3V300 Series

Product Features

1、The same series of directional control valves can be integrated valve group, saving space and cost.
2, unified intake and exhaust, unified wiring, in case of failure, easy to find.
3. Flexible combination, strong expansion, can be connected to the number of directional control valves for any combination or expansion.

Model indication method

The model representation contains two parts: the base and the blind.

Base type indication method

3V100M — 5F — □

Specification code	serial number code	Tooth type code
3V100M:100 Series Chassis 3V200M:200 Series Chassis 3V300M:300 Series Chassis	1F:1 company 2F:2 Company ..... 16F:16 Company	Blank: PT Teeth T:NPT teeth G:G teeth

Blind plate type indication method

3V100M — B

Specification code	Blind plate code
3V100M:100 Series Chassis 3V200M:200 Series Chassis 3V300M:300 Series Chassis	B:Blind plate for base

Note:
1、Base assembly contains base, base gasket, screw.
2、Blind plate assembly contains Yuk plate, base gasket, screw.

External dimension drawing (mm)

With 3V solenoid valve class

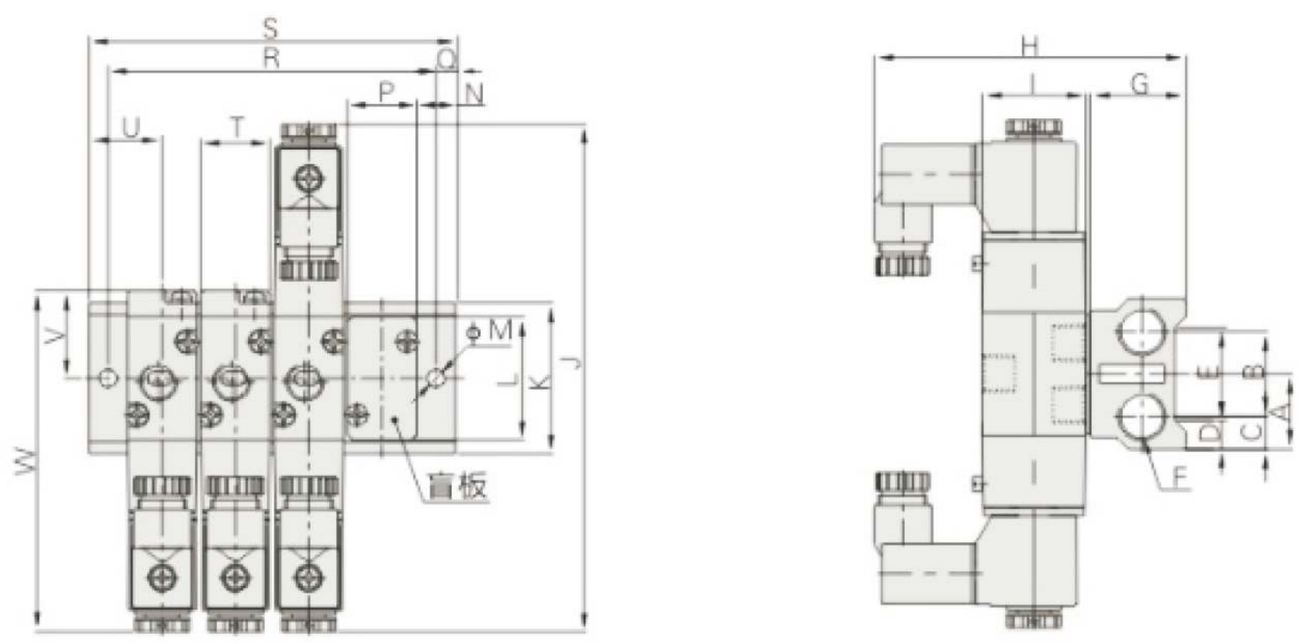

Model \ Symbol	A	B	C	D	E	F	G	H	I	J	K	L	M	N	P	Q	T	U	V	W
3V100M	19.5	22	8.5	7.5	24	G1/4	25	81	27	131.4	39	32	4.5	10	18	5	18	19	22.7	88.4
3V200M	22.5	25	10	8	29	G1/4	25	92.7	35	162.4	45	40	4.5	12	22	6	22	23	27.7	109.4
3V300M	26	28	12	8	36	G3/8	29	99.2	40	174.8	52	47	4.5	13.5	27	6	27	27	32.5	119.9

Model \ Symbol	R															
	1F	2F	3F	4F	5F	6F	7F	8F	9F	10F	11F	12F	13F	14F	15F	16F
3V100M	28	47	66	85	104	123	142	161	180	199	218	237	256	275	294	313
3V200M	34	57	80	103	126	149	172	195	218	241	264	287	310	333	356	379
3V300M	42	70	98	126	154	182	210	238	266	294	322	350	378	406	434	462

Model \ Symbol	S															
	1F	2F	3F	4F	5F	6F	7F	8F	9F	10F	11F	12F	13F	14F	15F	16F
3V100M	38	57	76	95	114	133	152	171	190	209	228	247	266	285	304	323
3V200M	46	69	92	115	138	161	184	207	230	253	276	299	322	345	368	391
3V300M	54	82	110	138	166	194	222	250	278	306	334	390	390	418	446	474

Specifications and options

Item/base model	110M	200M	300M	400M
Working medium	Air (filtered by a 40um or higher filter)			
Working temperature ℃	-20-70℃			
Applicable valve body series	4V110 Series	4V200 Series	4V300 Series	4V400 Series

Product Features

1、The same series of directional control valves can be integrated valve group, saving space and cost.
2, unified intake and exhaust, unified wiring, in case of failure, easy to find.
3. Flexible combination, strong expansion, can be connected to the number of directional control valves for any combination or expansion.

Model indication method

The model representation contains two parts: the base and the blind.

Base type indication method

100M — 5F ① — □

Specification code	serial number code	Tooth type code
100M:100 Series Chassis	1F:1 company	Blank: PT Teeth
200M:200 Series Chassis	2F:2 Company	T:NPT teeth
300M:300 Series Chassis	.....	G:G teeth
400M:400 Series Chassis	16F:16 Company	

Blind plate type indication method

100M — B

Specification code	Blind plate code
100M:100 Series Chassis	B:Blind plate for base
200M:200 Series Chassis	
300M:300 Series Chassis	
400M:400 Series Chassis	

1.The number of 100M and 200M series blocks to 16; the number of 300M series blocks to 12; the number of 400M series blocks to 8.

External dimension drawing (mm)

With 4V solenoid valve class

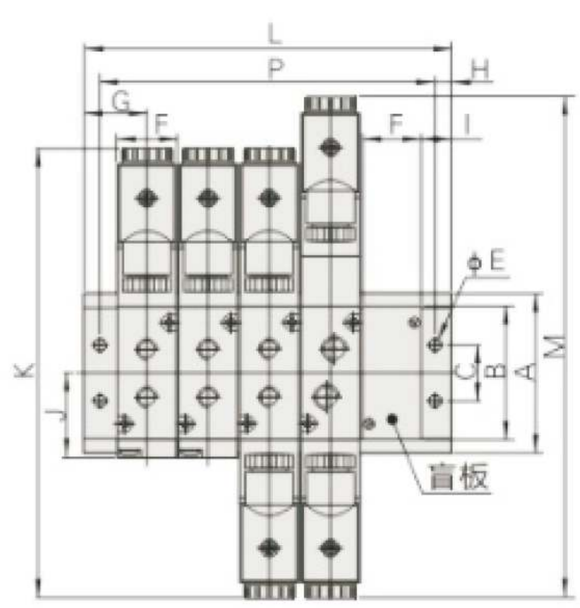

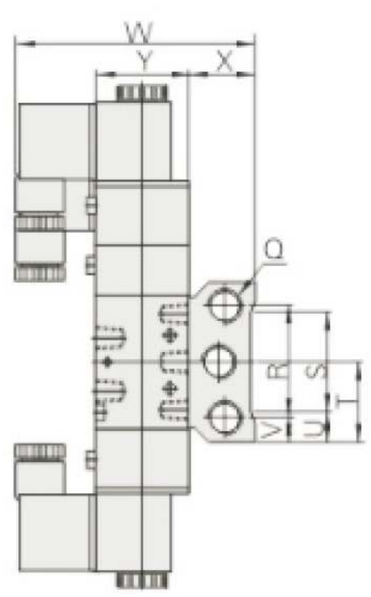

Model/symbol	A	B	C	E	F	G	H	I	J	K	M	Q	R	S	T	U	V	W	X	Y
100M□F	58	43.2	20	4.5	18.3	19	5	10	28.2	139.4	154.5	G1/4	40	30	29	14	9	79	25	27
200M□F	61	50.7	21	4.5	22.4	23	6	12	31.7	170	189	G1/4	43	32	30.5	14.5	9	93	27	35
300M□F	75	64.8	26	4.5	27.3	27	6	13.5	40	188.8	208	G3/8	53	48	37.5	13.5	11	99.5	30	40
400M□F	104	94.5	32	5.5	34.3	31.5	7	14.5	57	221.8	243	G1/2	68	63	52	18.5	18	112.5	38	50

Model/symbol	L															
	1F	2F	3F	4F	5F	6F	7F	8F	9F	10F	11F	12F	13F	14F	15F	16F
100M□F	38	57	76	95	114	133	152	171	190	209	228	247	266	285	304	323
200M□F	46	69	92	115	138	161	184	207	230	253	276	299	322	345	368	391
300M□F	54	82	110	138	166	194	222	250	278	306	334	362	–	–	–	–
400M□F	63	98	133	168	203	238	273	308	–	–	–	–	–	–	–	–

Model/symbol	P															
	1F	2F	3F	4F	5F	6F	7F	8F	9F	10F	11F	12F	13F	14F	15F	16F
100M□F	28	47	66	85	104	123	142	161	180	199	218	237	256	275	294	313
200M□F	34	57	80	103	126	149	172	195	218	241	264	287	333	333	356	379
300M□F	42	70	98	126	154	182	210	238	266	294	322	350	–	–	–	–
400M□F	49	84	119	154	189	224	259	294	–	–	–	–	–	–	–	–

Order Code

CD A080 A

Coil Category
CD:DIN socket type coil
CL:Outlet Coils

Standard Voltage
A: AC220V
B:DC24V
C:AC110V
E:AC24V
F:DC12V

Coil inner diameter
A080:Wire round specification (8.0mm in inner diameter)
A092:Wire round specification (9.0mm in inner diameter)

Notes on terminal wiring

With DC specification coil terminals, because with the polarity of the indicator, the wiring should pay attention to the positive and negative polarity, "1" to the positive pole, "2" to the negative pole, such as reverse the indicator will not light, the valve can still operate.

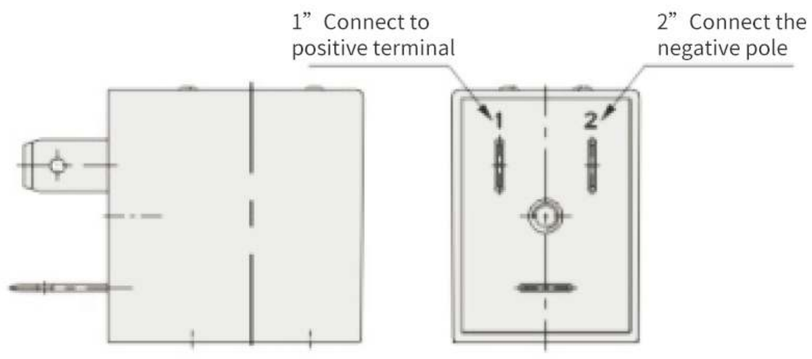

080 Series

Product Series	Coil type	Voltage type	Coil internal	Terminal type	Terminalinternal connection coil	Remarks
3V100 Series 4V100 Series 4M100 Series	CDA080 terminal type	AC type	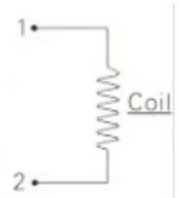	PL1515T-P1	-	Suitable for CDA080 AC, DC type coils
				PL1515T-P2	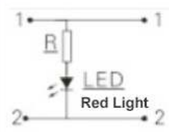	Suitable for CDA080 AC, DC type coils
	CDA080 terminal type	DC type		PL1515T-P3	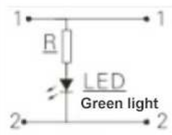	Suitable for CDA080 AC, DC type coils
	CLA080 Outlet Type	AC type	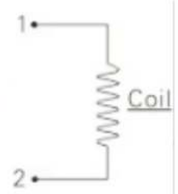	-	-	-
	CLA080 Outlet Type	DC type		-	-	-

092 Series

Product Series	Coil type	Voltage type	Coil internal	Terminal type	Terminalinternal connection coil	Remarks
3V1 Series 3V200 Series 3V300 Series 4V200 Series 4V300 Series 4V400 Series 4M200 Series 4M300 Series	CDA092 terminal type	AC type	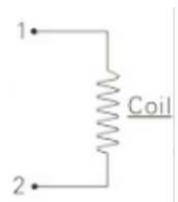	PL1515T-P1	-	Suitable for CDA092 AC, DC type coils
				PL1515T-P2	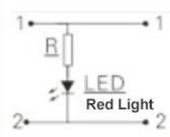	Suitable for CDA092 AC, DC type coils
	CDA092 terminal type	DC type		PL1515T-P3	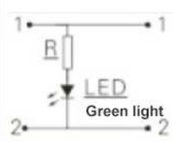	Suitable for CDA092 AC, DC type coils
	CLA092 Outlet Type	AC type	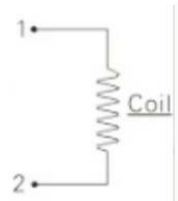	-	-	-
	CLA092 Outlet Type	DC type		-	-	-

Standard Specification

Model	3A100-M5	3A12-M5	3A110-06	3A120-06
Working medium	Air (filtered by a 40um or higher filter)			
Action mode	External pneumatic control type			
*Pipe diameter	M5		G1/8	
Effective cross-sectional area	5.5mm²(Cv=0.3)		12mm²(Cv=0.67)	
Number of positions	Three mouths and two bits			
**Lubrication	Not required			
Use pressure range	0.15-0.8MPa(21-114psi)			
Guaranteed pressure resistance	1.5MPa(215psi)			
Operating temperature C	-20-70			
Body material	Aluminum alloy			
***Maximum operation frequency	5 times/second			

*Takeover tooth type has PT, NPT teeth available.
**If there is oil lubrication, it cannot be stopped in the middle, and the recommended lubricant is ISOVG32 or equivalent.
***Maximum operation frequency is no-load condition.

Symbols

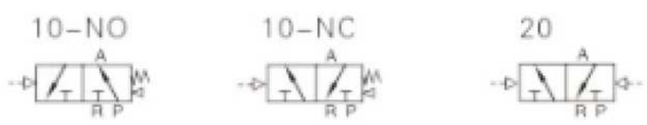

Model number indication method

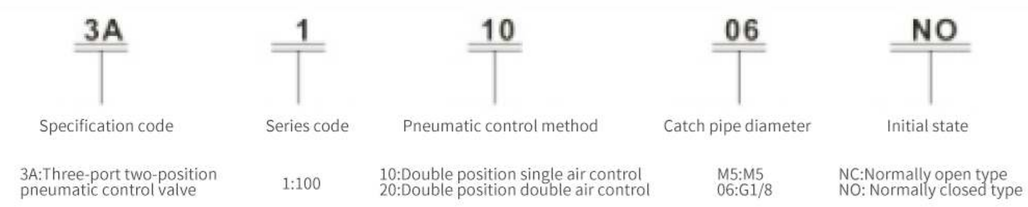

1 Double-headed double-position type without normally open, normally closed, so this code is blank
2 When the receiver is M5 teeth, this code is empty.

Product Features

1. Sliding column structure, good sealing, responsive.
2、Double-headed air control with memory function.
3. The inner hole is processed with special technology, low friction resistance,low starting air pressure and long service life.
4. No need for oil lubrication.
5. Multi-position installation, easy to install and use.
6, can be integrated with the base valve group, saving installation space.

Flow Characteristics

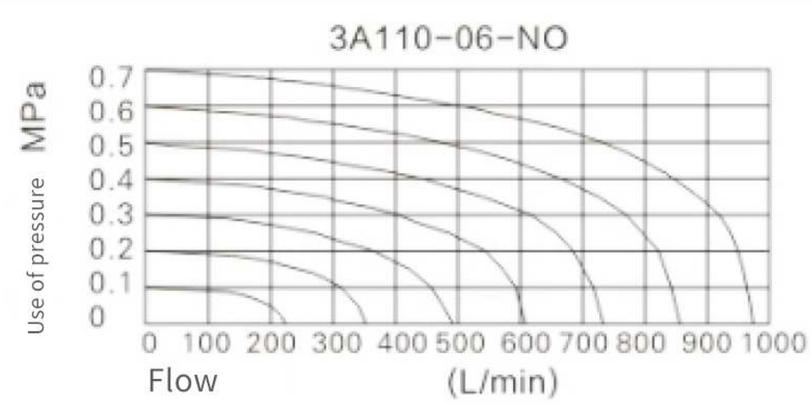

Internal structure

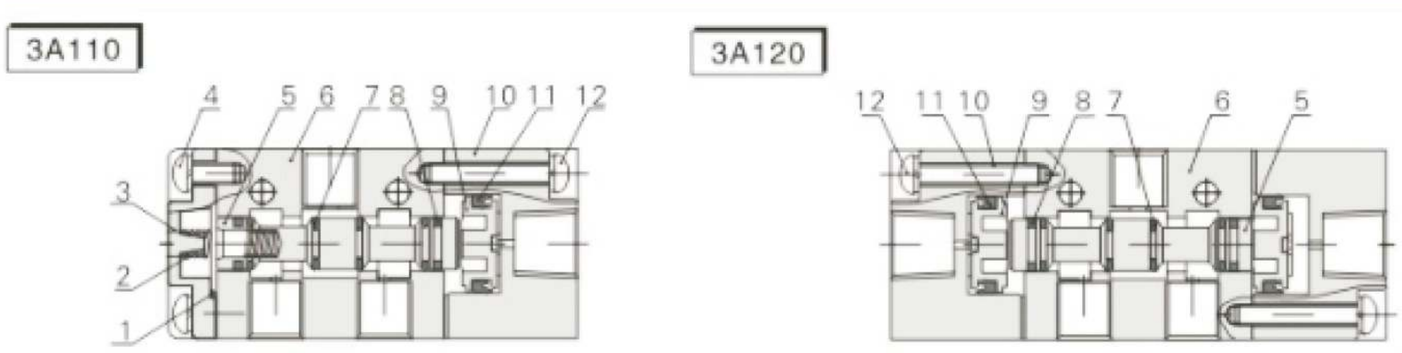

Number	Name	Number	Name
1	Stop Gasket	7	O-ring
2	Spring	8	Wear-resistant rings
3	Bottom cover	9	Piston
4	Round head screws	10	Guide body
5	Shaft core	11	Piston O-ring
6	Body	12	Round head screws

External dimension drawing (mm)

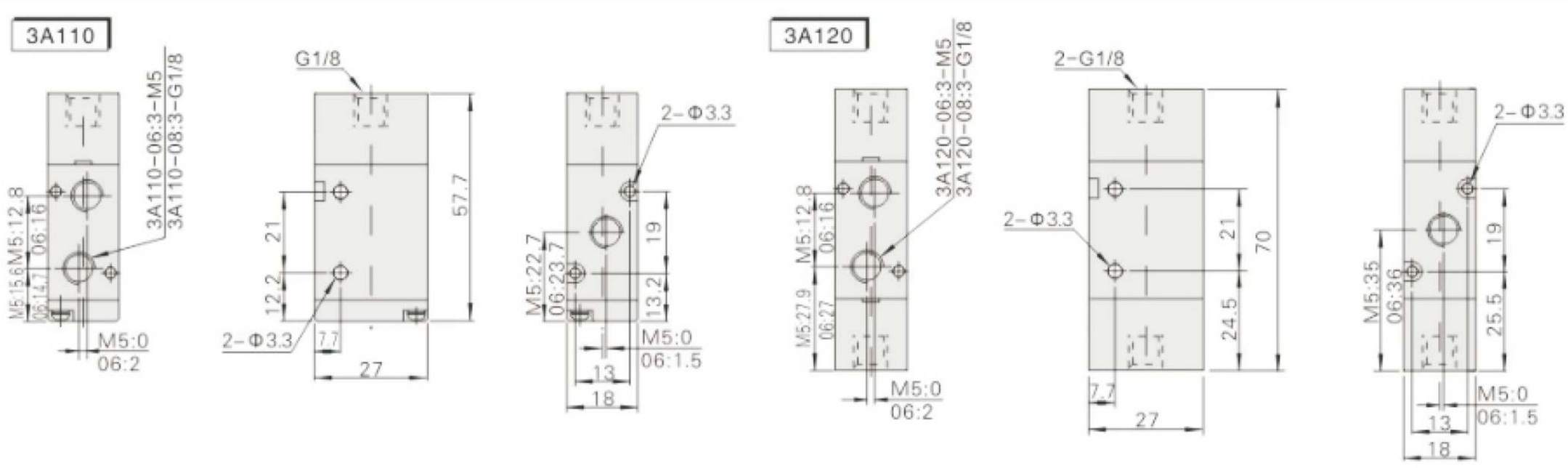

Standard Specification

Model	3A210-06	3A220-06	3A210-08	3A220-08
Working medium	Air (filtered by a 40um or higher filter)			
Action mode	External pneumatic control type			
*Pipe diameter	Inlet = Outlet = G1/8		Inlet = Outlet = G1/4	
Effective cross-sectional area	14mm²(Cv=0.7)		16mm²(Cv=0.89)	
Number of positions	Three mouths and two bits			
**Lubrication	Not required			
Use pressure range	0.15-0.8MPa(21-114psi)			
Guaranteed pressure resistance	1.5MPa(215psi)			
Operating temperature C	-20-70			
Body material	Aluminum alloy			
***Maximum operation frequency	5 times/second			

*Takeover tooth type has PT, NPT teeth available.
**If there is oil lubrication, it cannot be stopped in the middle, and the recommended lubricant is ISOVG32 or equivalent.
***Maximum operation frequency is no-load condition.

Symbols

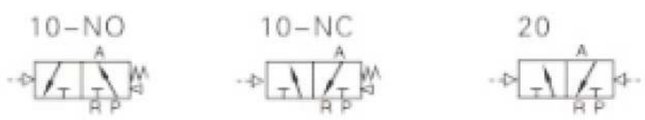

Model number indication method

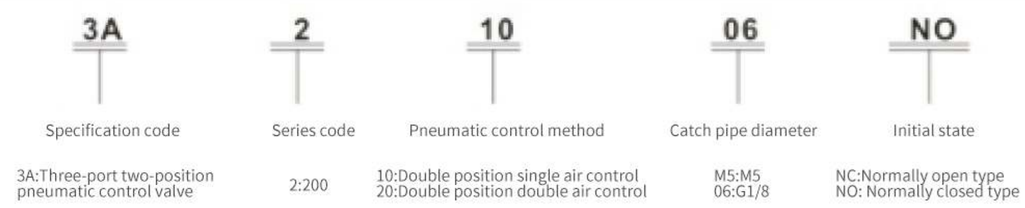

1 Double-headed double-position type without normally open, normally closed, so this code is blank
2 When the receiver is M5 teeth, this code is empty.

Product Features

1. Sliding column structure, good sealing, responsive.
2、Double-headed air control with memory function.
3. The inner hole is processed with special technology, low friction resistance,low starting air pressure and long service life.
4. No need for oil lubrication.
5. Multi-position installation, easy to install and use.
6, can be integrated with the base valve group, saving installation space.

Flow Characteristics

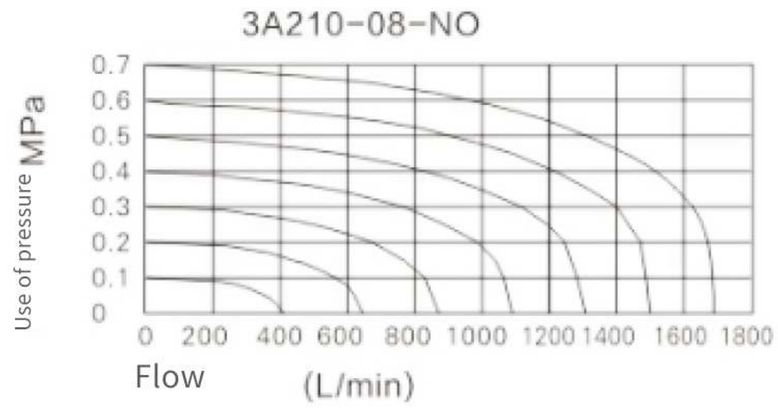

Internal structure

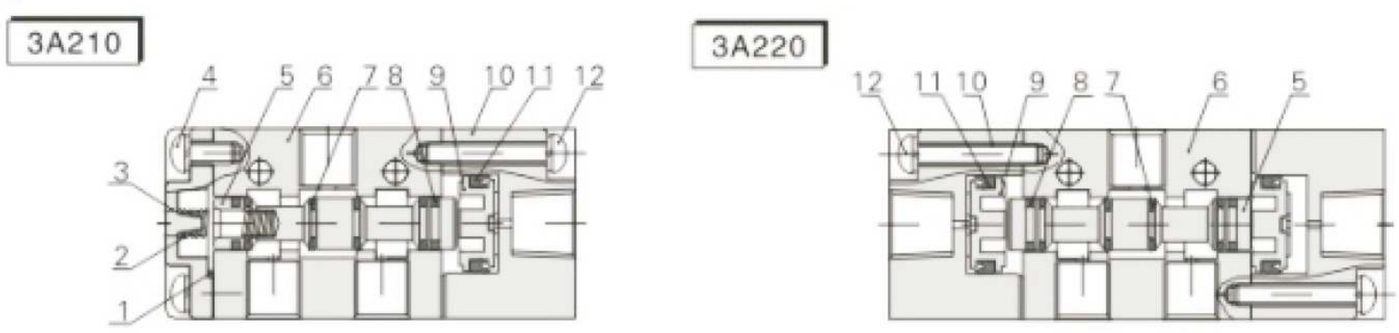

Number	Name	Number	Name
1	Stop Gasket	7	O-ring
2	Spring	8	Wear-resistant rings
3	Bottom cover	9	Piston
4	Round head screws	10	Guide body
5	Shaft core	11	Piston O-ring
6	Body	12	Round head screws

External dimension drawing (mm)

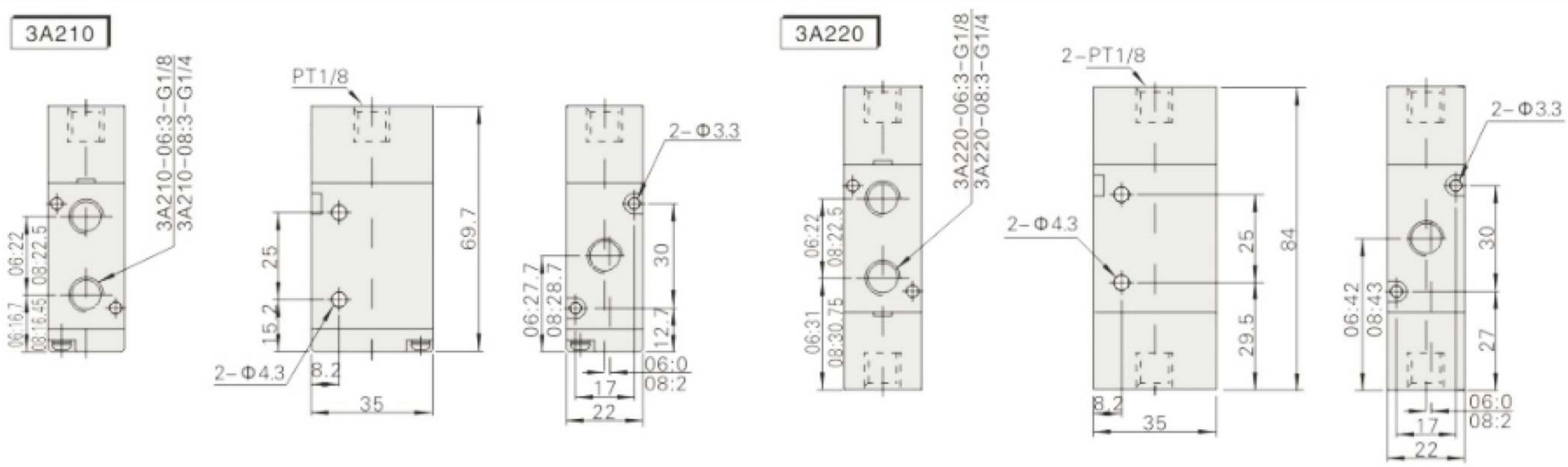

Standard Specification

Model	3A310-08	3A320-08	3A310-10	3A320-10
Working medium	Air (filtered by a 40um or higher filter)			
Action mode	External pneumatic control type			
*Pipe diameter	Inlet = Outlet = G1/4		Inlet = Outlet = G3/8	
Effective cross-sectional area	25mm²(Cv=1.39)		30mm²(Cv=1.67)	
Number of positions	Three mouths and two bits			
**Lubrication	Not required			
Use pressure range	0.15-0.8MPa(21-114psi)			
Guaranteed pressure resistance	1.5MPa(215psi)			
Operating temperature C	-20-70			
Body material	Aluminum alloy			
***Maximum operation frequency	5 times/second			

*Takeover tooth type has PT, NPT teeth available.
**If there is oil lubrication, it cannot be stopped in the middle, and the recommended lubricant is ISOVG32 or equivalent.
***Maximum operation frequency is no-load condition.

Symbols

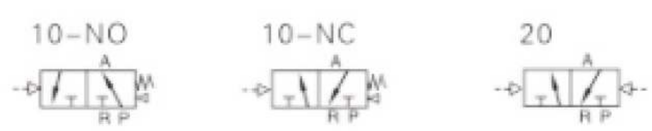

Model number indication method

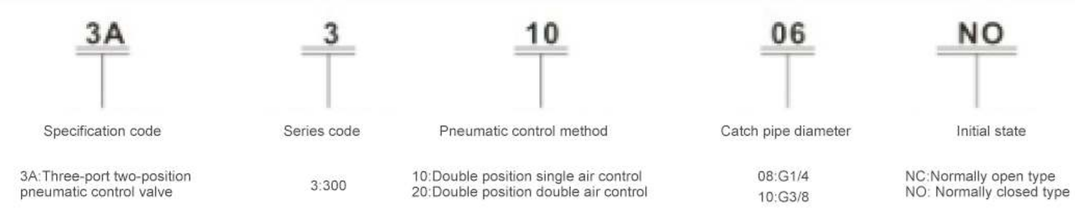

1 Double-headed double-position type without normally open, normally closed, so this code is blank
2 When the receiver is M5 teeth, this code is empty.

Product Features

1. Sliding column structure, good sealing, responsive.
2.Double-headed air control with memory function.
3. The inner hole is processed with special technology, low friction resistance,low starting air pressure and long service life.
4. No need for oil lubrication.
5. Multi-position installation, easy to install and use.
6.can be integrated with the base valve group, saving installation space.

Flow Characteristics

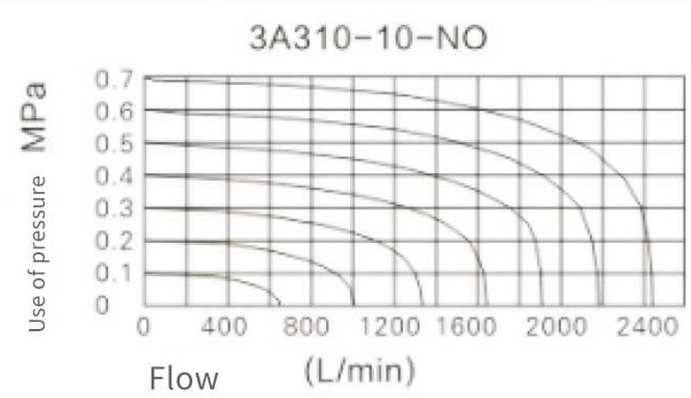

Internal structure

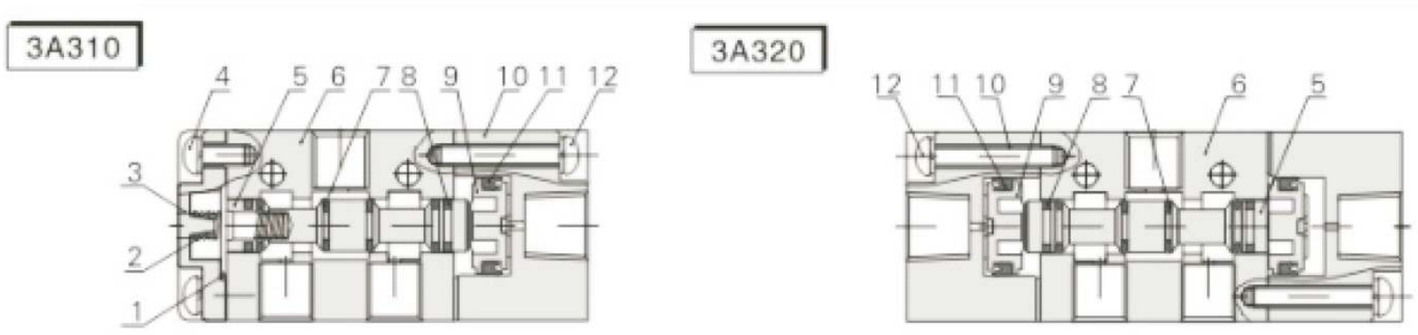

Number	Name	Number	Name
1	Stop Gasket	7	O-ring
2	Spring	8	Wear-resistant rings
3	Bottom cover	9	Piston
4	Round head screws	10	Guide body
5	Shaft core	11	Piston O-ring
6	Body	12	Round head screws

External dimension drawing (mm)

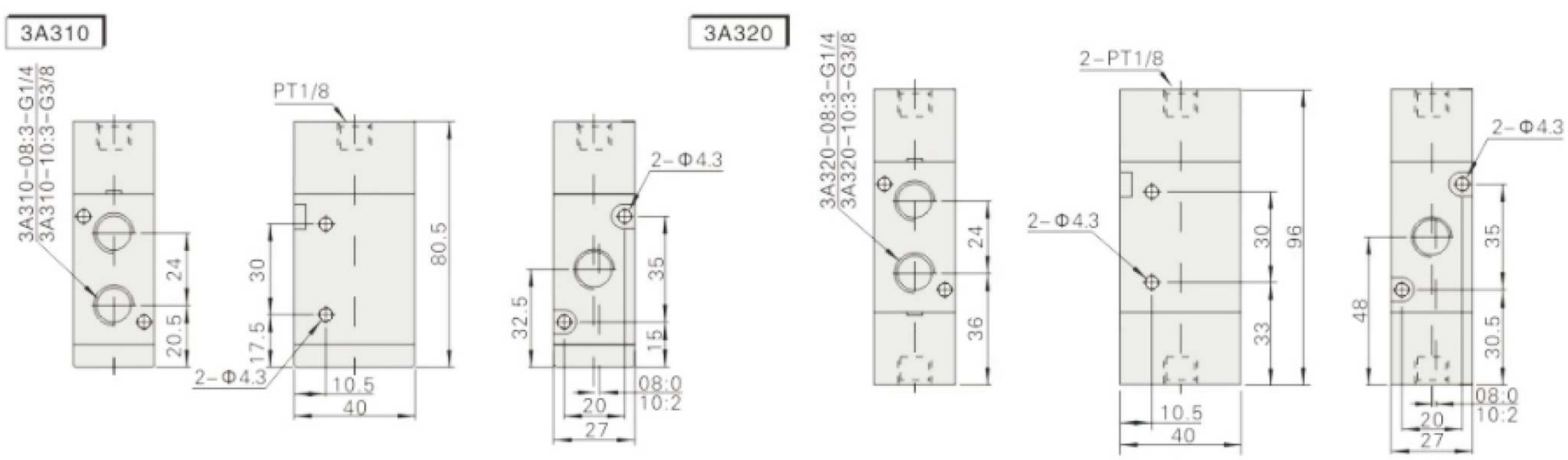

Standard Specification

Model	3A410-15	3A420-15
Working medium	Air (filtered by a 40um or higher filter)	
Action mode	External pneumatic control type	
*Pipe diameter	Inlet = Outlet = G1/2	
Effective cross-sectional area	50mm²(Cv=2.7)	
Number of positions	Three mouths and two bits	
**Lubrication	Not required	
Use pressure range	0.15-0.8MPa(21-114psi)	
Guaranteed pressure resistance	1.5MPa(215psi)	
Operating temperature C	-20-70	
Body material	Aluminum alloy	
***Maximum operation frequency	5 times/second	

*Takeover tooth type with PT, NPT available;
**Maximum operation frequency is no-load condition.

Symbols

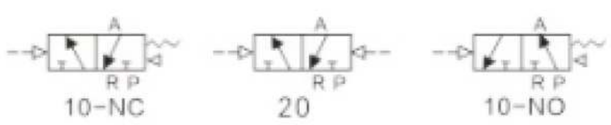

Flow Characteristics

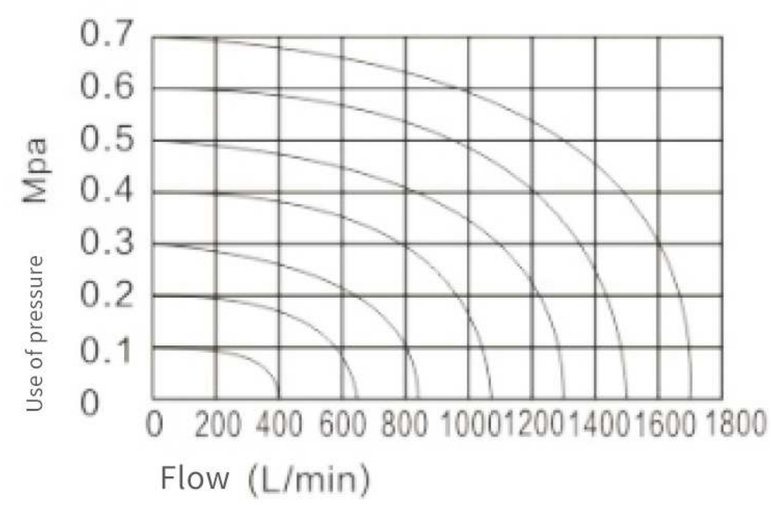

Product Features

1. Sliding column structure, good sealing, responsive.
2、Double-headed air control with memory function.
3. The inner hole is processed with special technology, low friction resistance,low starting air pressure and long service life.
4. No need for oil lubrication.
5. Multi-position installation, easy to install and use.
6, can be integrated with the base valve group, saving installation space.

Internal structure

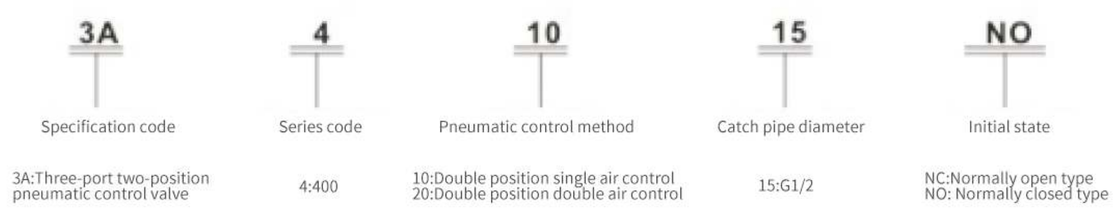

External dimension drawing (mm)

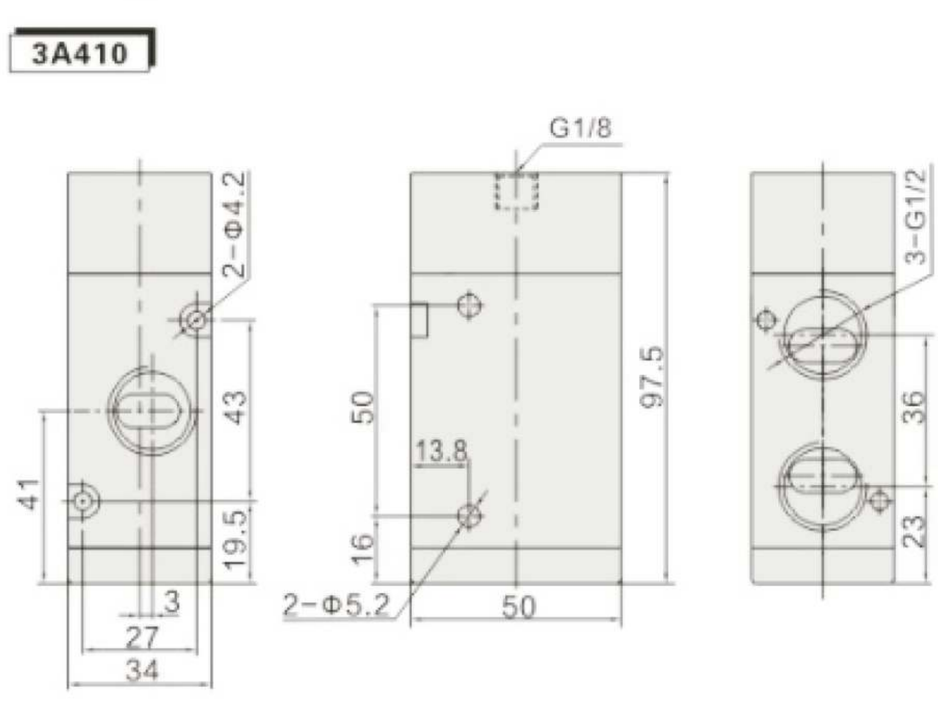

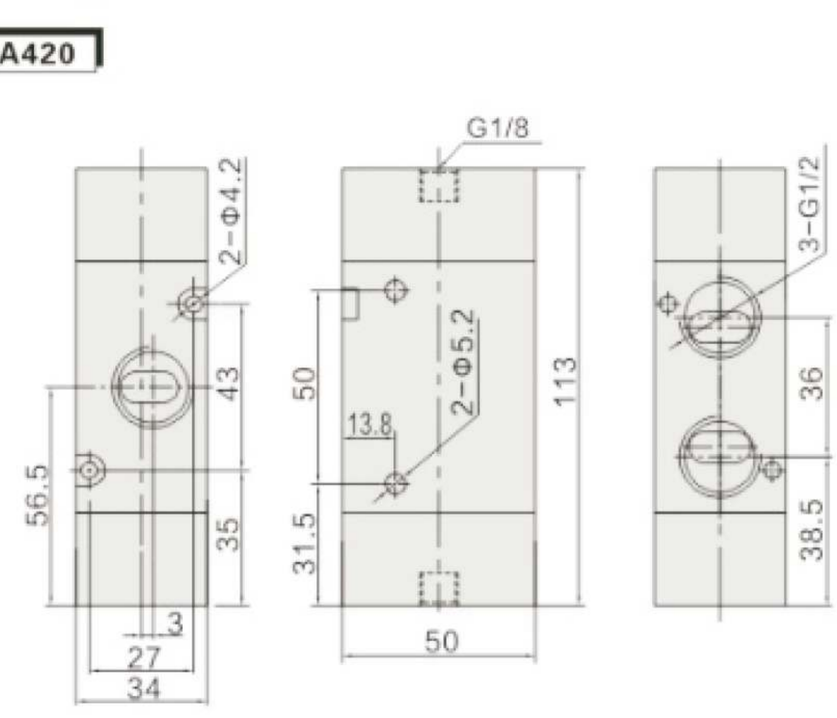

Standard Specification

Model	4A110-M5 4A120-M5	4A130C-M5 4A130E-M5 4A130P-M5	4A110-06 4A120-06	4A130C-06 4A130E-06 4A130P-06
Working medium	Air (filtered by a 40um or higher filter)			
Action mode	External pneumatic control type			
*Pipe diameter	Inlet=Outlet=M5		Inlet = Outlet = G1/8	
Effective cross-sectional area	5.5mm²(Cv=0.31)	5.0mm²(Cv=0.28)	12mm²(Cv=0.67)	9.0mm²(Cv=0.50)
Number of positions	Five mouths and two seats	Five mouths of three	Five mouths and two seats	Five mouths of three
**Lubrication	Not required			
Use pressure range	0.15-0.8MPa(21-114psi)			
Guaranteed pressure resistance	1.5MPa(215psi)			
Operating temperature C	-20-70			
Body material	Aluminum alloy			
***Maximum operation frequency	5 times/second	3 times/second	5 times/second	3 times/second
Weight	4A110-M5:85g 4A120-M5:140g	165g	4A110-06:85g 4A120-06:140g	165g

"The receiver teeth type has PT, NPT teeth available.
**If there is oil lubrication, it cannot be stopped in the middle, and the recommended lubricant is ISOVG32 or the same grade with oil
***The maximum action frequency is no-load condition.

Symbols

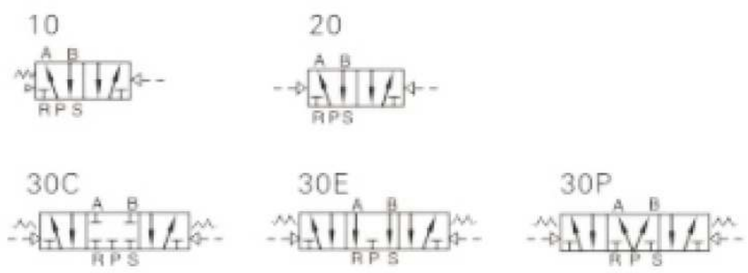

Flow Characteristics

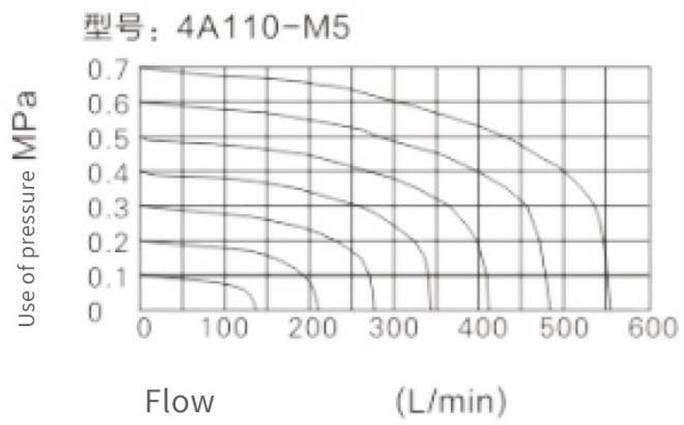

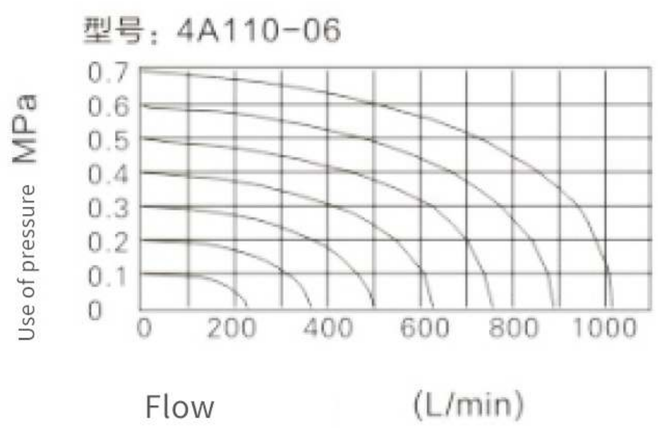

Product Features

1. Sliding column structure, good sealing and responsive.
2. Three position solenoid valve has three central functions to choose from.
3. Double-headed two-position pneumatic sniff with memory function.
4, bore using special technology processing, low friction resistance, low starting air pressure, long service life.
5. No need for oil lubrication.
6. Can be integrated with the base valve group, saving installation space.

Model number indication method

4A — Specification code
4A:Five-port two-position Five-port three-position pneumatic control valve

1 — Series code
1:100

10 — Electric control method
10:Double position single air control
20:Double position double air control
30C:Three position double air control medium closed type
30E:Three position double air control medium exhaust type
30P:Three position double air control medium pressure type

—

06 — Catch pipe diameter
M5:M5
06:G1/8

Internal structure

4A110

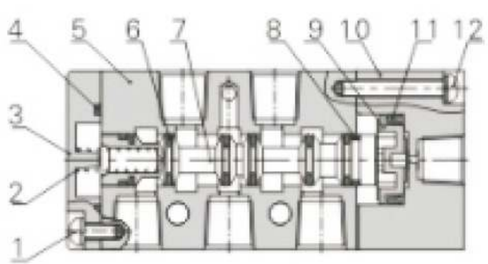

4A120

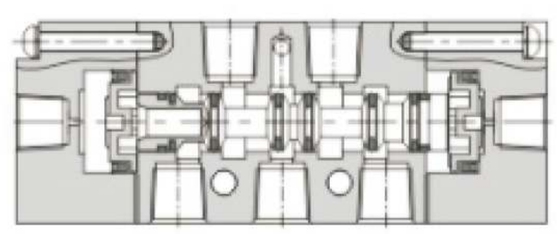

4A130C

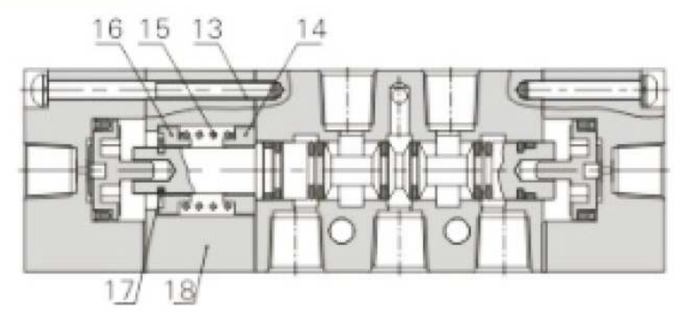

Number	Name	Number	Name	Number	Name	Number	Name	Number	Name	Number	Name
1	Connector	5	Fixed iron piece	9	Wear Resistant Ring	13	Stop leak pad	17	Spring	21	side cover
2	Fixing nut	6	Piston	10	Bottom cover	14	O-ring	18	Manual pin	22	Restore seat
3	Coil	7	Guide body	11	Screws	15	Shaft core	19	Restore Seat		
4	movable iron	8	Body	12	Spring	16	Shaped O-ring	20	Spring		

Dimensional drawing(mm)

4A110

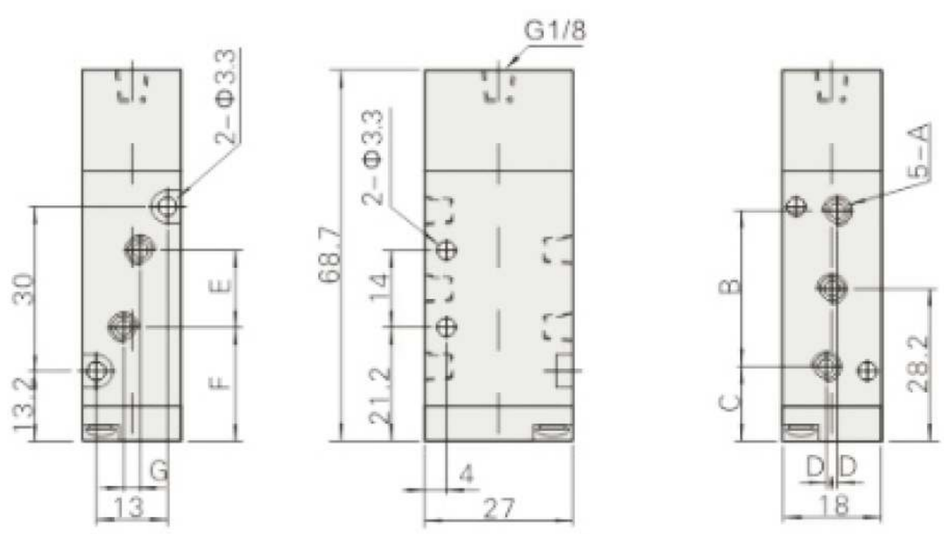

4A120

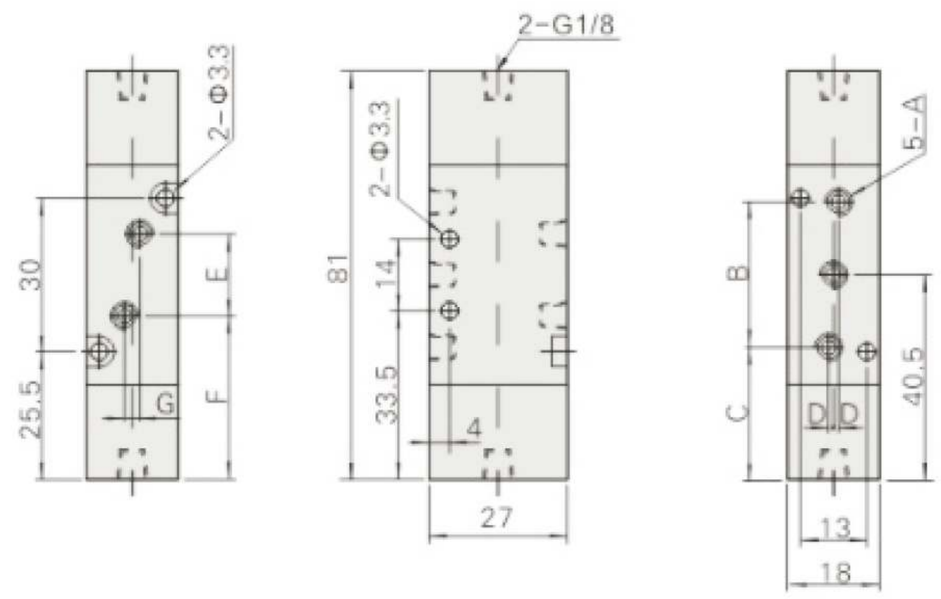

4A130

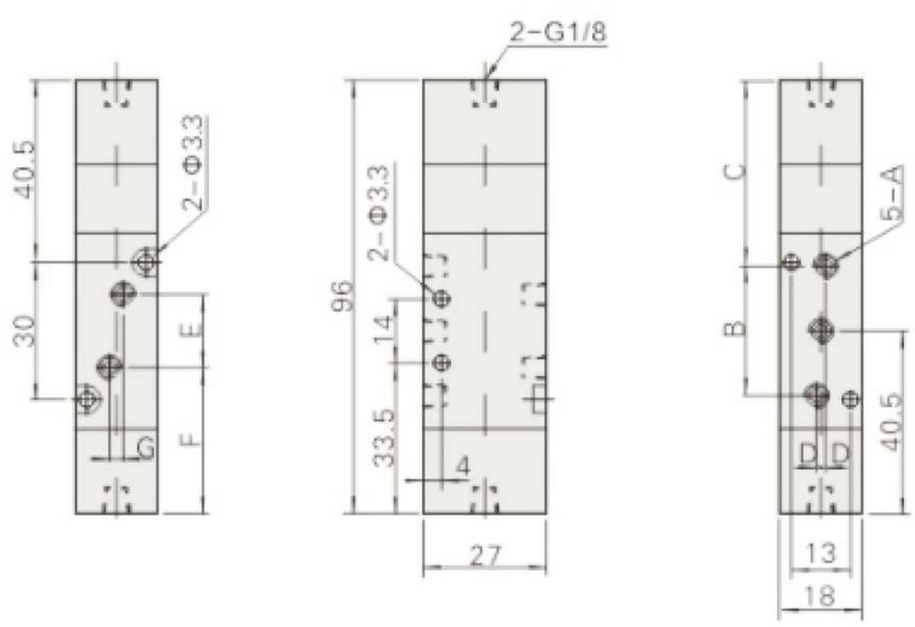

Model \ Symbol	A	B	C	D	E	F	G	Model \ Symbol	A	B	C	D	E	F	G
4A120-06	M5×0.8	27	14.7	0	14	21.2	0	**4A120-06**	G1/8	28	26.5	1	16	32.5	3
4A130-M5	G1/8	28	14.2	1	16	20.2	3	**4A130-M5**	M5×0.8	27	42	0	14	33.5	0
4A130-06	M5×0.8	27	27	0	14	33.5	0	**4A130-06**	G1/8	28	41.5	1	16	32.5	3

Standard Specification

Model	4A210-06 4A220-06	4A230C-06 4A230E-06 4A230P-06	4A210-08 4A220-08	4A230C-08 4A230E-08 4A230P-08
Working medium	Air (filtered by a 40um or higher filter)			
Action mode	External pneumatic control type			
*Pipe diameter	Inlet = Outlet = Exhaust = G1/8		Inlet = Outlet = G1/4 Exhaust = PT1/8	
Effective cross-sectional area	14mm²(Cv=0.78)	12.0mm²(Cv=0.67)	16.0mm²(Cv=0.89)	12.0mm²(Cv=0.67)
Number of positions	Five mouths and two seats	Five mouths of three	Five mouths and two seats	Five mouths of three
**Lubrication	Not required			
Use pressure range	0.15-0.8MPa(21-114psi)			
Guaranteed pressure resistance	1.5MPa(215psi)			
Operating temperature C	-20-70			
Body material	Aluminum alloy			
***Maximum operation frequency	5 times/second	3 times/second	5 times/second	3 times/second
Weight	4A210-06:185g 4A220-06:285g	365g	4A210-08:185g 4A220-08:285g	365g

"The receiver teeth type has PT, NPT teeth available.
**If there is oil lubrication, it cannot be stopped in the middle, and the recommended lubricant is ISOVG32 or the same grade with oil
***The maximum action frequency is no-load condition.

Symbols

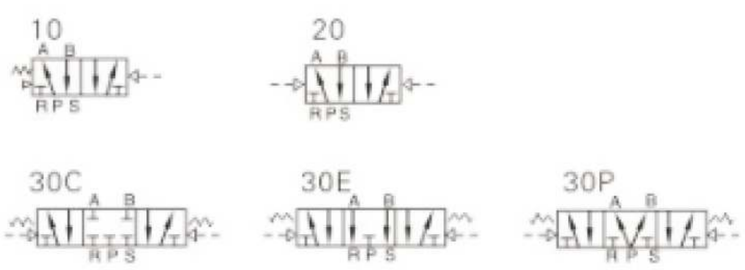

Flow Characteristics

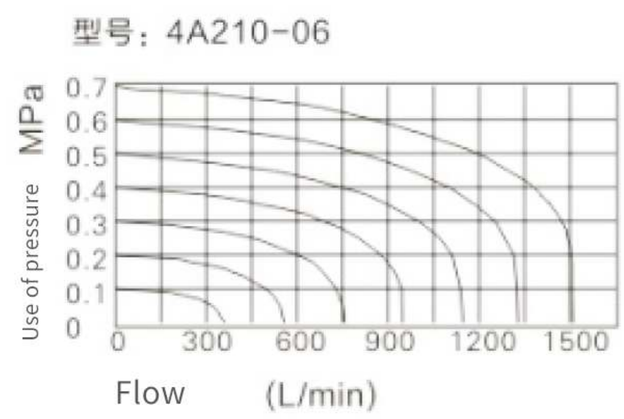

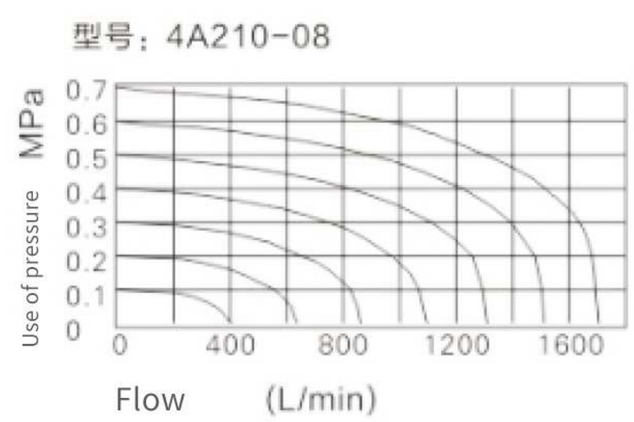

Product Features

1. Sliding column structure, good sealing and responsive.
2. Three position solenoid valve has three central functions to choose from.
3. Double-headed two-position pneumatic sniff with memory function.
4, bore using special technology processing, low friction resistance, low starting air pressure, long service life.
5. No need for oil lubrication.
6. Can be integrated with the base valve group, saving installation space.

Model number indication method

4A	2	10	—	08
Specification code	Series code	Electric control method		Catch pipe diameter
Five-port two-position, Five-port three-position pneumatic control valve	2:200	10:Double position single air control 20:Double position double air control 30C:Three position double air control medium closed type 30E:Three position double air control medium exhaust type 30P:Three position double air control medium pressure type		06:G1/8 08:G1/4

Internal structure

4A210

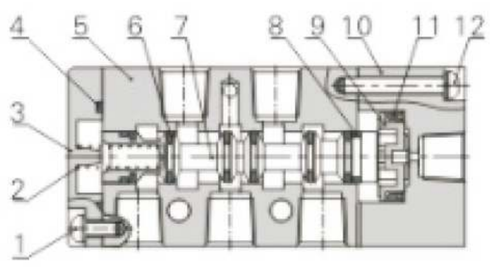

4A220

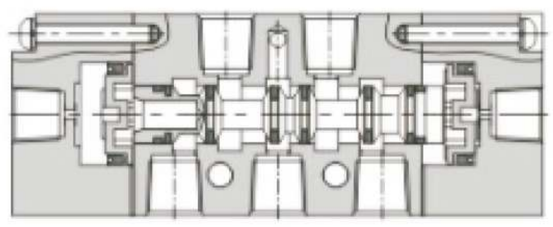

4A230C

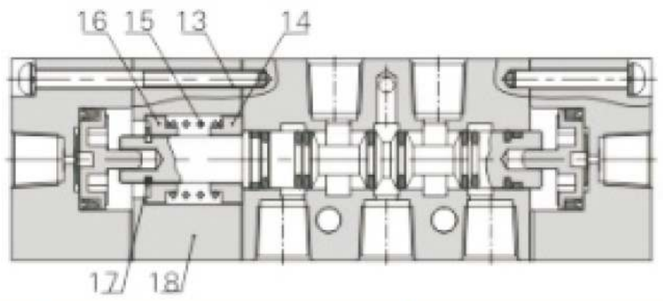

Number	Name	Number	Name	Number	Name	Number	Name	Number	Name	Number	Name
1	Connector	5	Fixed iron piece	9	Wear Resistant Ring	13	Stop leak pad	17	Spring	21	side cover
2	Fixing nut	6	Piston	10	Bottom cover	14	O-ring	18	Manual pin	22	Restore seat
3	Coil	7	Guide body	11	Screws	15	Shaft core	19	Restore Seat		
4	movable iron	8	Body	12	Spring	16	Shaped O-ring	20	Spring		

Dimensional drawing(mm)

4A210

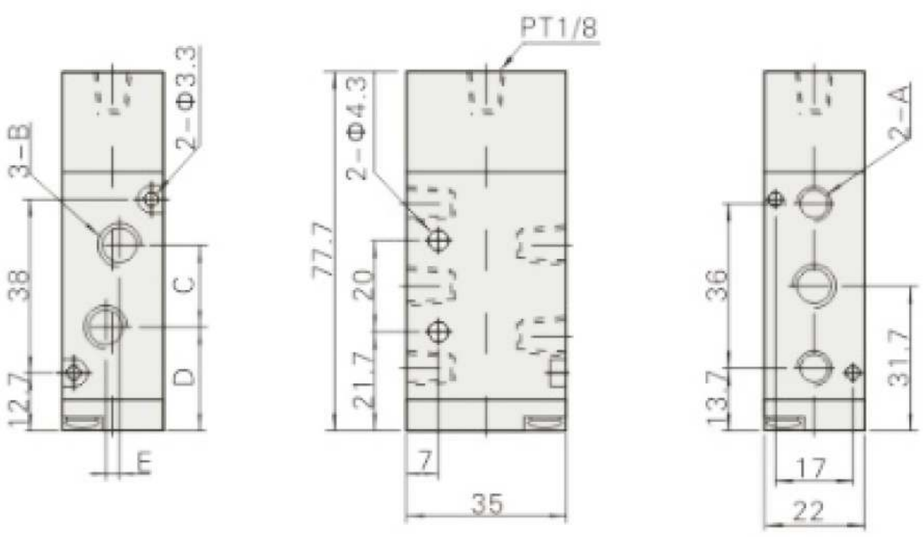

4A220

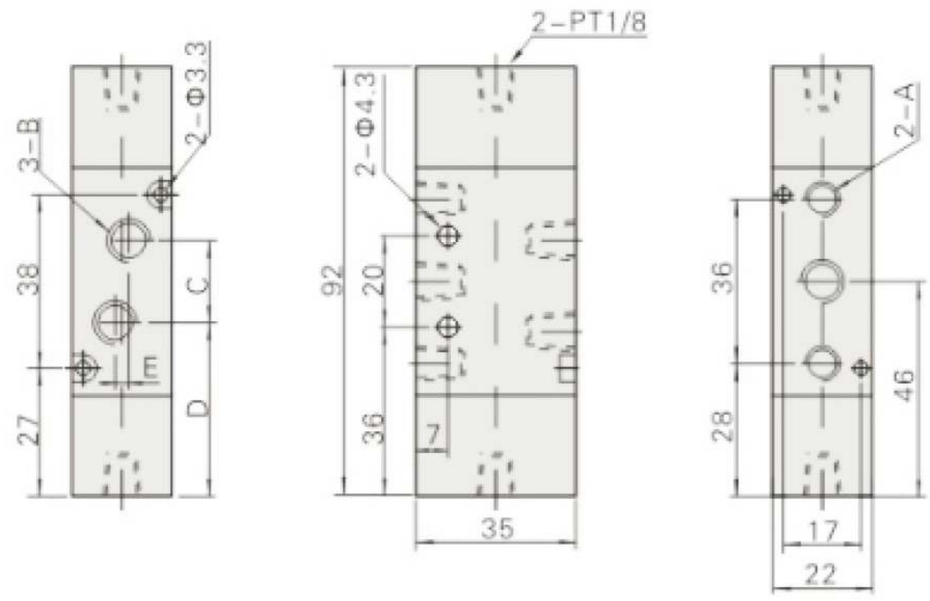

4A230

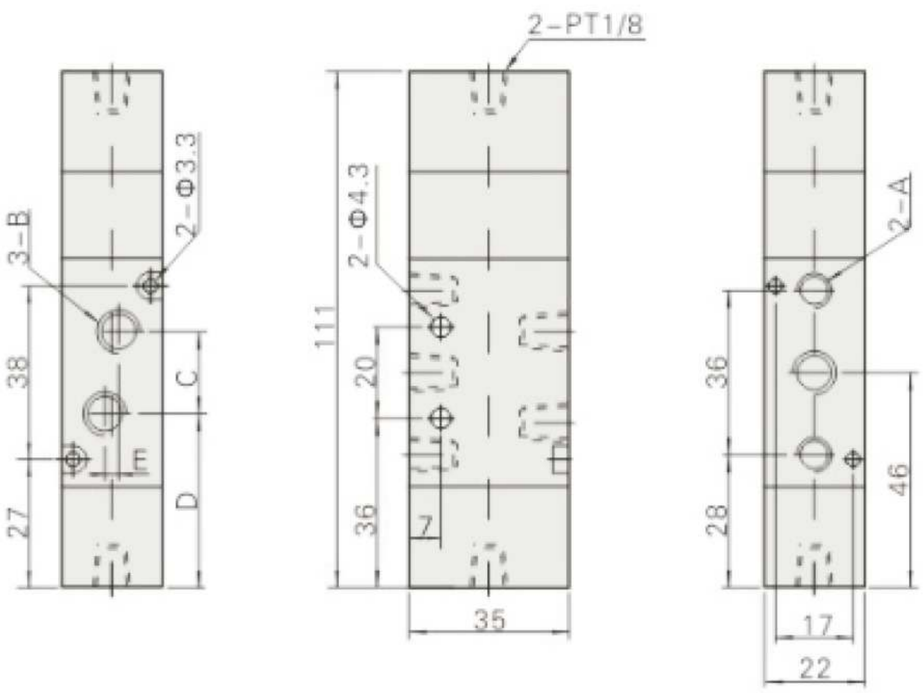

Model \ Symbol	A	B	C	D	E	Model \ Symbol	A	B	C	D	E
4A210-06	G1/8	G1/8	18	22.7	0	**4A220-08**	G1/8	G1/4	21	35.5	3
4A210-08	G1/8	G1/4	21	21.2	3	**4A230-06**	G1/8	G1/8	18	37	0
4A220-06	G1/8	G1/8	18	37	0	**4A230-08**	G1/8	G1/4	21	35.5	3

Standard Specification

Model	4A310-08 4A320-08	4A330C-08 4A330E-08 4A330P-08	4A310-10 4A320-10	4A330C-10 4A330E-10 4A330P-10
Working medium	Air (filtered by a 40um or higher filter)			
Action mode	External pneumatic control type			
*Pipe diameter	Inlet = Outlet = Exhaust = G1/4		Inlet = Outlet = G3/8 Exhaust = PT1/4	
Effective cross-sectional area	25mm² (Cv=1.40)	18.0mm² (Cv=1.00)	30.0mm² (Cv=1.68)	18.0mm² (Cv=1.00)
Number of positions	Five mouths and two seats	Five mouths of three	Five mouths and two seats	Five mouths of three
**Lubrication	Not required			
Use pressure range	0.15-0.8MPa(21-114psi)			
Guaranteed pressure resistance	1.5MPa(215psi)			
Operating temperature C	-20-70			
Body material	Aluminum alloy			
***Maximum operation frequency	4 times/second	3 times/second	4 times/second	3 times/second
Weight	4A310-06:275g 4A320-06:365g	505g	4A310-10:275g 4A320-10:365g	505g

"The receiver teeth type has PT, NPT teeth available.
**If there is oil lubrication, it cannot be stopped in the middle, and the recommended lubricant is ISOVG32 or the same grade with oil
***The maximum action frequency is no-load condition.

Symbols

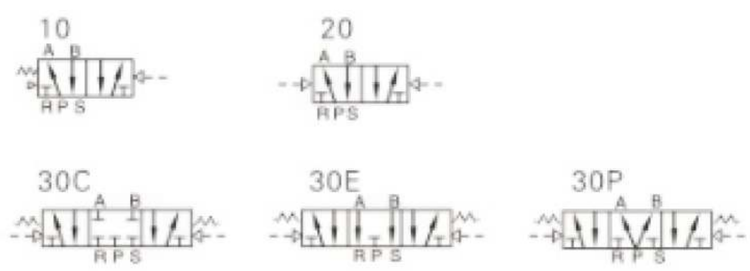

Flow Characteristics

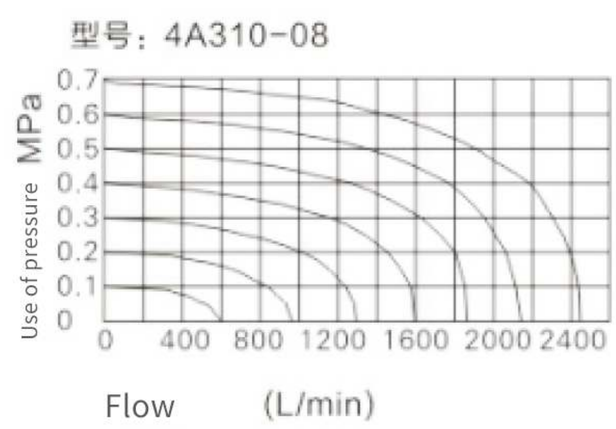

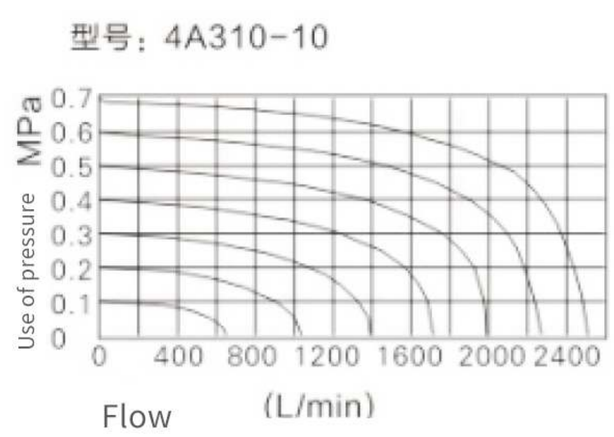

Product Features

1. Sliding column structure, good sealing and responsive.
2. Three position solenoid valve has three central functions to choose from.
3. Double-headed two-position pneumatic sniff with memory function.
4, bore using special technology processing, low friction resistance, low starting air pressure, long service life.
5. No need for oil lubrication.
6. Can be integrated with the base valve group, saving installation space.

Model number indication method

4A	3	10	—	08
Specification code Five-port two-position, Five-port three-position pneumatic control valve	Series code 2:200	Electric control method 10:Double position single air control 20:Double position double air control 30C:Three position double air control medium closed type 30E:Three position double air control medium exhaust type 30P:Three position double air control medium pressure type		Catch pipe diameter 06:G1/8 08:G1/4

Internal structure

4A310

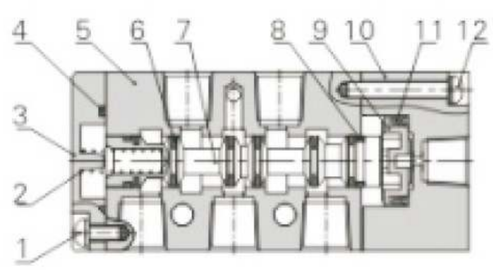

4A320

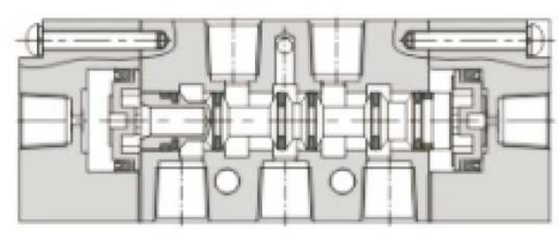

4A330C

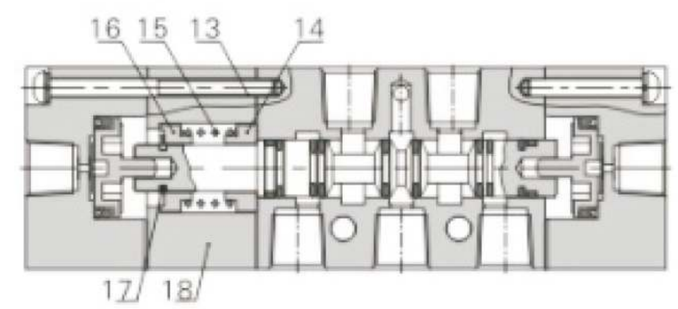

Number	Name	Number	Name	Number	Name	Number	Name	Number	Name
1	Round head screws	5	Body	9	Piston	13	Screw	17	E shaped grommet
2	Spring	6	O-ring	10	Guide body	14	Restore Seat	18	Side cover
3	Bottom cover	7	Shaft core	11	O-ring	15	Restore Spring	19	
4	Stop gasket	8	Wear-resistant ring	12	Round head screws	16	Return seat	20	

Dimensional drawing(mm)

4A310

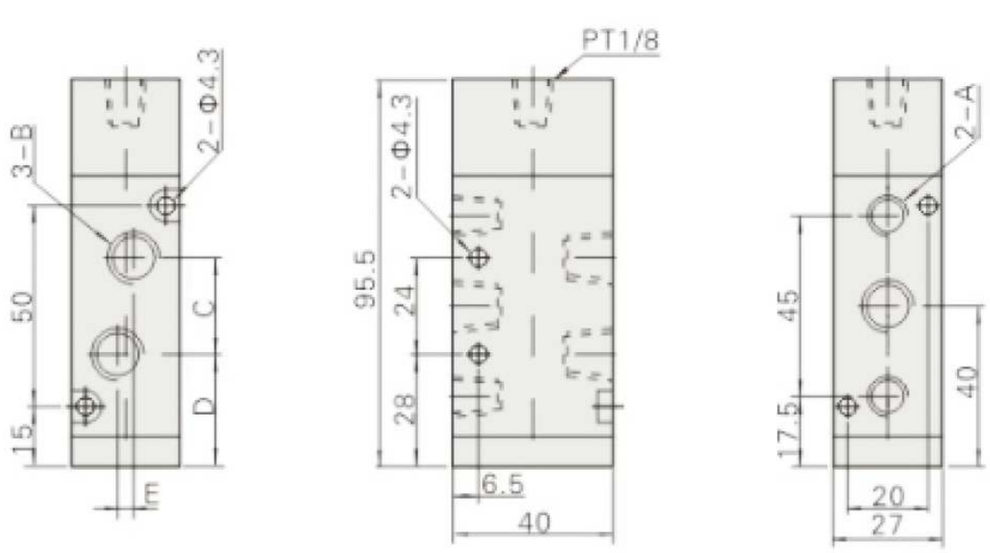

4A320

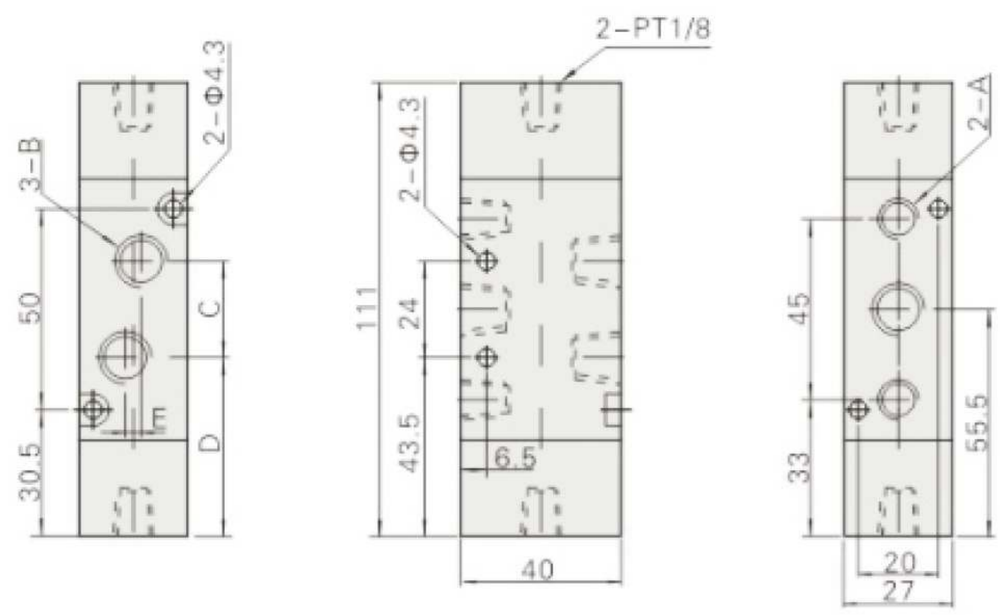

4A330

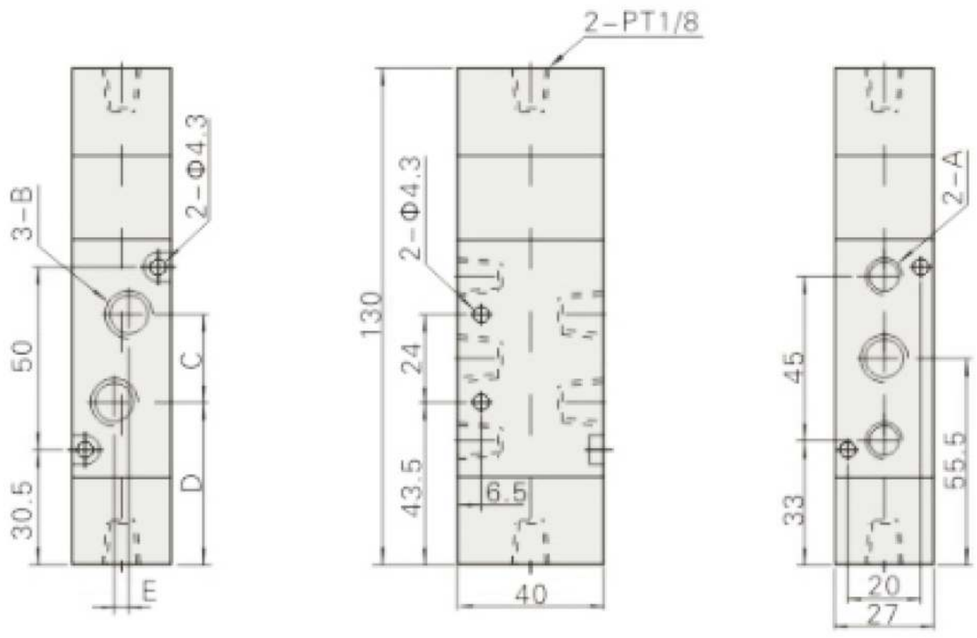

Model \ Symbol	A	B	C	D	E	Model \ Symbol	A	B	C	D	E
4A310-08	G1/4	G1/4	22	29	0	**4A320-10**	G1/4	G3/8	24	43.5	4
4A310-10	G1/4	G3/8	24	28	4	**4A330-08**	G1/4	G1/4	22	44.5	0
4A320-08	G1/4	G1/4	22	44.5	0	**4A330-10**	G1/4	G3/8	24	43.5	4

Standard Specification

Model	4A410-15	4A420-15	4A430C-15	4A430E-15	4A430P-15
Working medium	Air (filtered by a 40um or higher filter)				
Action mode	External pneumatic control type				
*Pipe diameter	Inlet = Outlet = Exhaust = G1/2				
Effective cross-sectional area	50.0²mm(Cv=2.79)		30.0²mm(Cv=1.68)		
Number of positions	Five mouths and two seats		Five mouths of three		
**Lubrication	Not required				
Use pressure range	0.15-0.8MPa(21-114psi)				
Guaranteed pressure resistance	1.5MPa(215psi)				
Operating temperature C	-20-70				
Body material	Aluminum alloy				
***Maximum operation frequency	3 times/second				
Weight	555g	685g	735g		

"The receiver teeth type has PT, NPT teeth available.
**If there is oil lubrication, it cannot be stopped in the middle, and the recommended lubricant is ISOVG32 or the same grade with oil
***The maximum action frequency is no-load condition.

Symbols

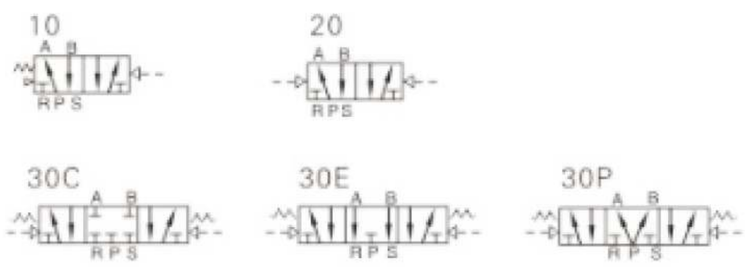

Flow Characteristics

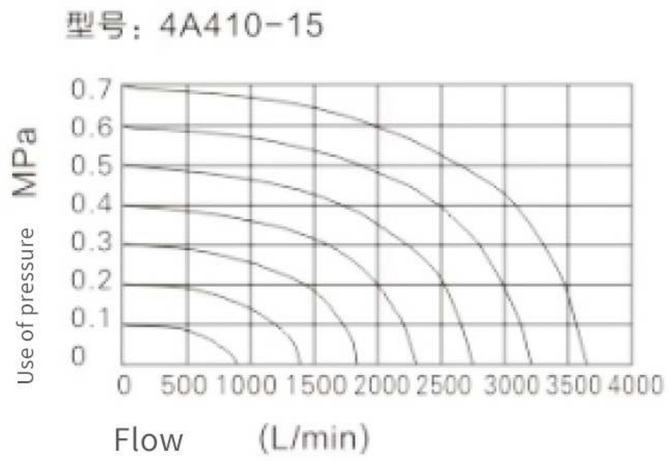

Product Features

1. Sliding column structure, good sealing and responsive.
2. Three position solenoid valve has three central functions to choose from.
3. Double-headed two-position pneumatic sniff with memory function.
4, bore using special technology processing, low friction resistance, low starting air pressure, long service life.
5. No need for oil lubrication.
6. Can be integrated with the base valve group, saving installation space.

Model number indication method

4A — Specification code
Five-port two-position, Five-port three-position pneumatic control valve

4 — Series code
4:400

10 — Electric control method
10:Double position single air control
20:Double position double air control
30C:Three position double air control medium closed type
30E:Three position double air control medium exhaust type
30P:Three position double air control medium pressure type

—

08 — Catch pipe diameter
15:G1/2

Internal structure

4A410

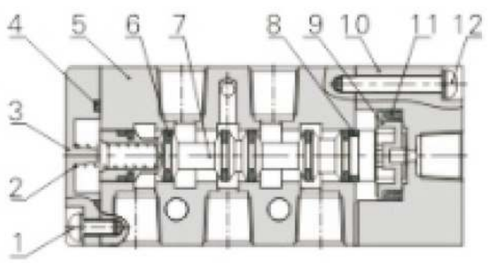

4A420

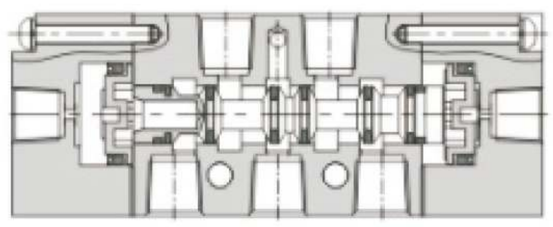

4A430C

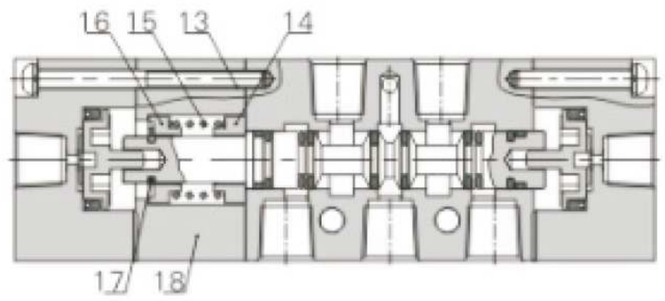

Number	Name	Number	Name	Number	Name	Number	Name	Number	Name
1	Round head screws	5	Body	9	Piston	13	Screw	17	E shaped grommet
2	Spring	6	O-ring	10	Guide body	14	Restore Seat	18	Side cover
3	Bottom cover	7	Shaft core	11	O-ring	15	Restore Spring	19	
4	Stop gasket	8	Wear-resistant ring	12	Round head screws	16	Return seat	20	

Dimensional drawing(mm)

4A410

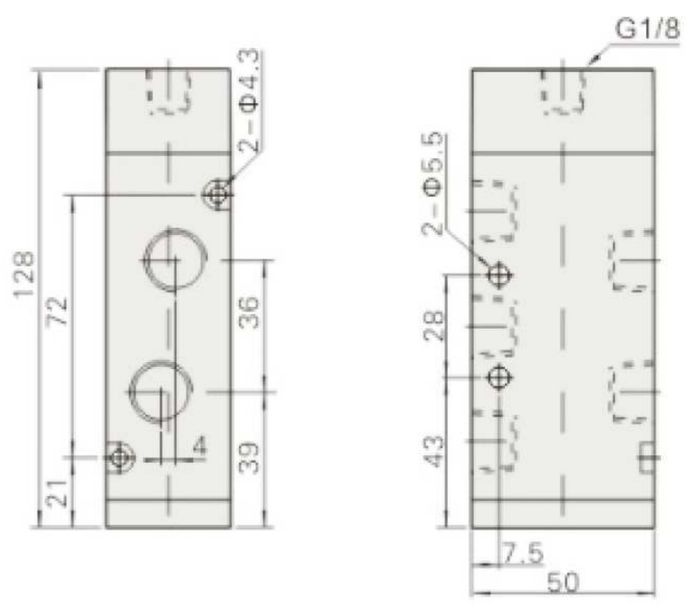

4A420

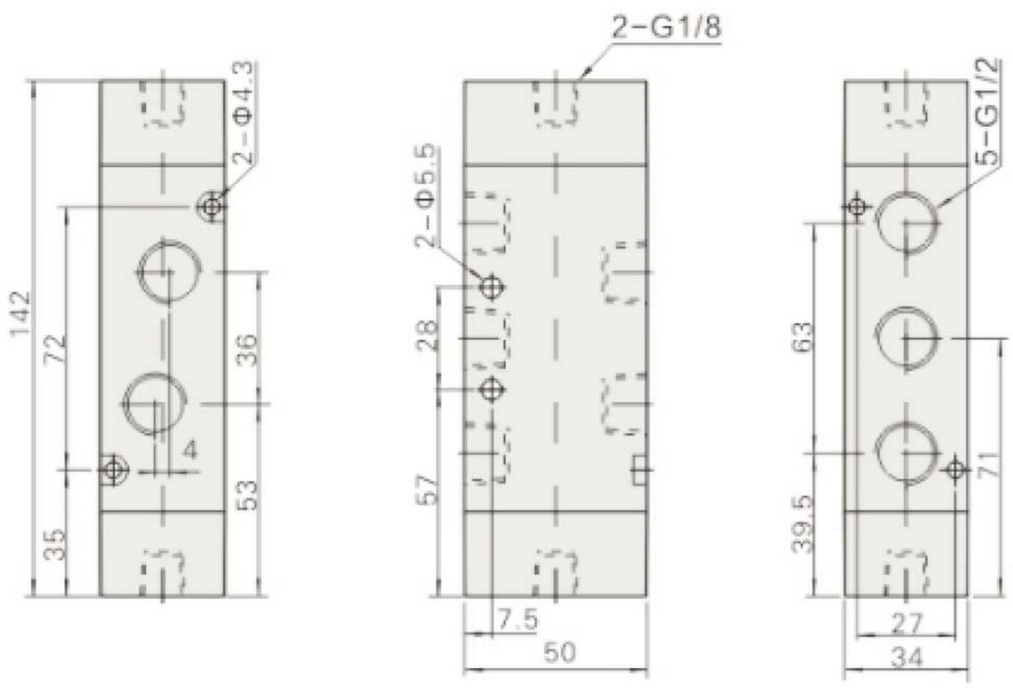

4A430

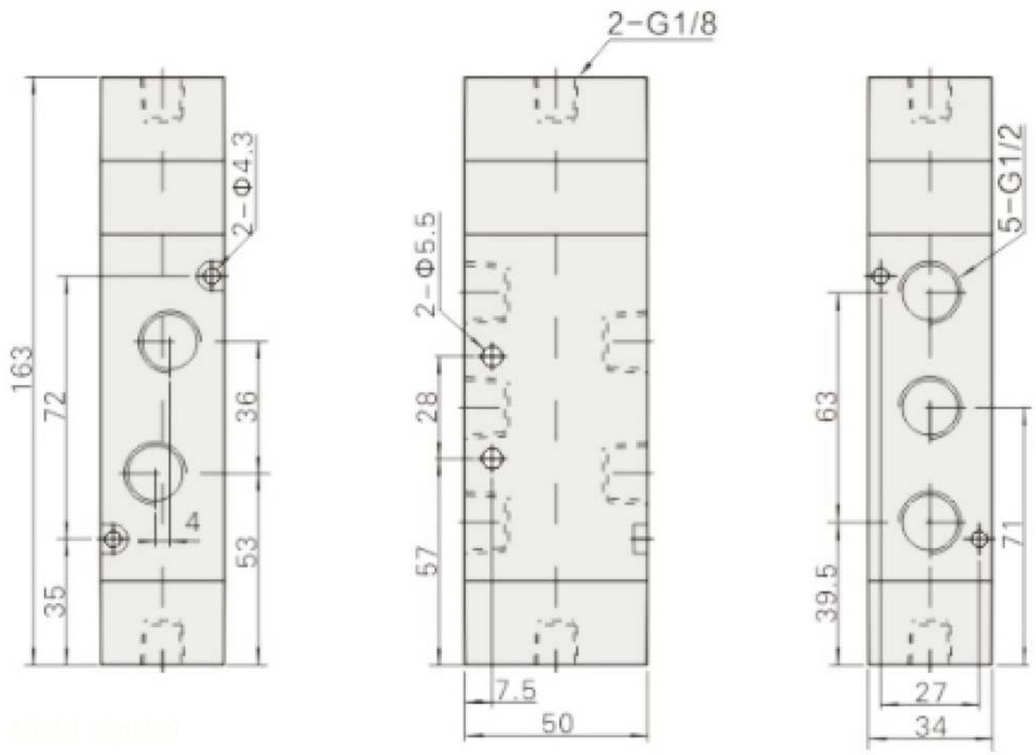

Standard Specification

Model	3H110-06	3H210-08	3H310-08	3H310-10	3H310-15
Working medium	Air (filtered by a 40um or higher filter)				
Action mode	External pneumatic control type				
*Pipe diameter	06:G1/8	08:G1/4		10:G3/8	15:G1/28
Effective cross-sectional area	14.0²mm(Cv=0.78)	16.0²mm(Cv=0.89)	25.0²mm(Cv=1.39)	30.0²mm(Cv=1.67)	50.0²mm(Cv=2.79)
Number of positions	Five mouths and two seats				
**Lubrication	Not required				
Use pressure range	0-0.8MPa(-114psi)				
Guaranteed pressure resistance	1.2MPa(170psi)				
Operating temperature C	-50-60				
Body material	Aluminum alloy				
***Maximum operation frequency	3 times/second				
Weight	555g	685g		735g	

Symbols

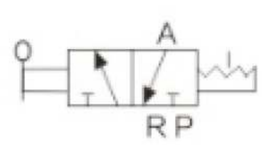

Model number indication method

3H	2	10	08
Specification code	Series code	Location code	Catch pipe diameter
3H two-position three-way hand-operated valve	2:200 3:300 4:400	10 double positions	06:G1/8 08:G1/4 10:G3/8 15: G1/2

Flow Characteristics

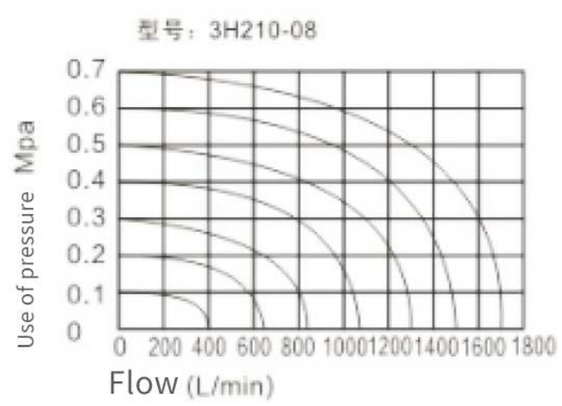

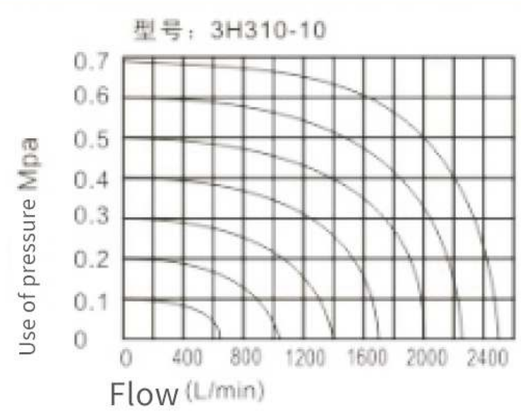

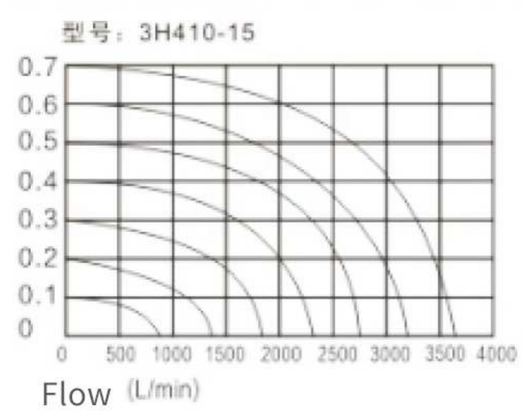

External dimension drawing (mm)

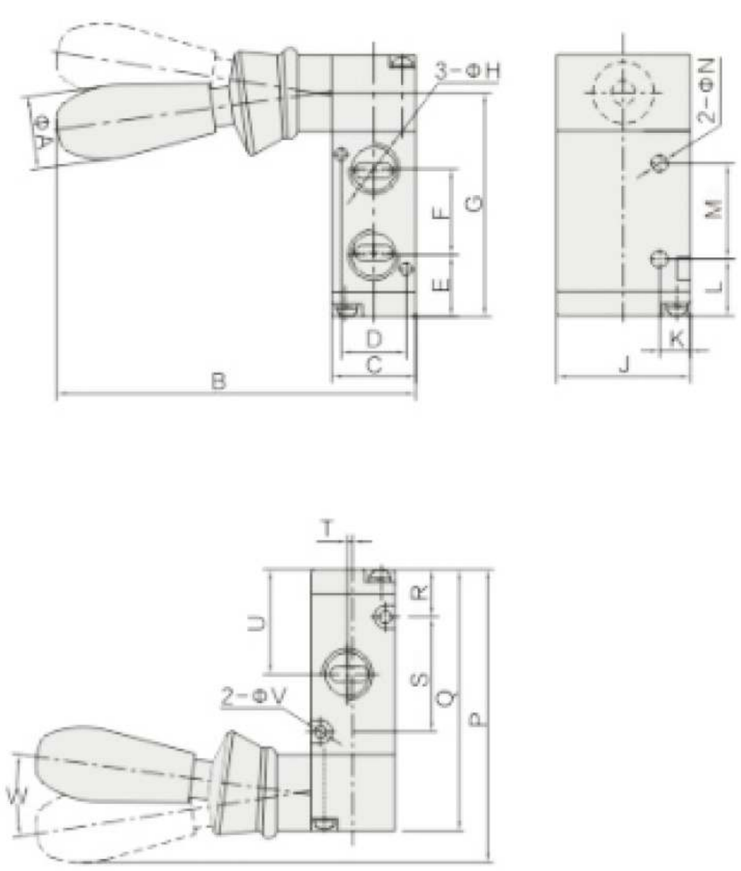

Symbols \ Model	3H210		3H310		3H410
	06	08	08	10	15
A	19	19	19	19	19
B	94	94	98.4	98.4	105
C	22	22	27	27	34
D	17	17	20	20	27
E	16.2	16.2	20.3	20.3	23
F	22.5	22.5	24	24	36
G	58.4	58.4	67.3	67.3	84.5
H	G1/8	G1/4	G1/4	G3/8	G1/2
J	35	35	40	40	50
K	8	8	10	10	13.5
L	14.9	14.9	14.8	14.8	16
M	25	25	30	30	50
N	4.3	4.3	4.3	4.3	5.2
P	76.5	76.5	85.2	85.2	105
Q	68.4	68.4	77.3	77.3	95.5
R	12.4	12.4	14.8	14.8	19.5
S	30	30	35	35	43
T	0	1.5	0	2	3
U	27.4	27.4	32.3	32.3	41
V	3.2	3.2	4.3	4.3	4.3
W	16.8	16.8	16.5	16.5	22.3

Symbols

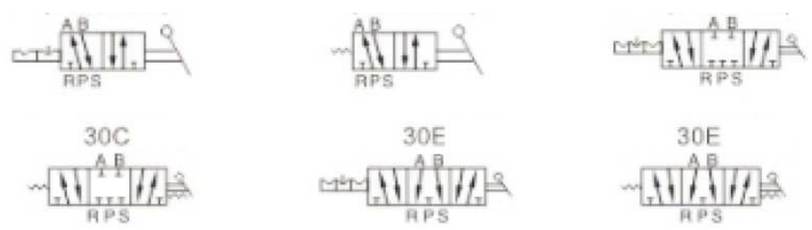

Product Features

1. Manual operation, smooth operation, accurate and reliable positioning.
2. Sliding column structure, good sealing, small volume, light weight, easy to install and dismantle: the inner hole is processed by special 3. technology, small friction resistance, long service life.
4、No need for oil lubrication.
5, panel mounting function, easy and simple installation, multi-faceted to meet customer needs.

Flow Characteristics

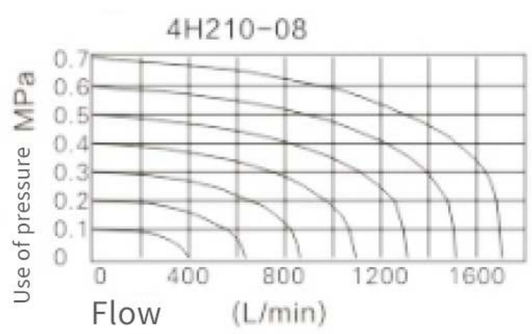

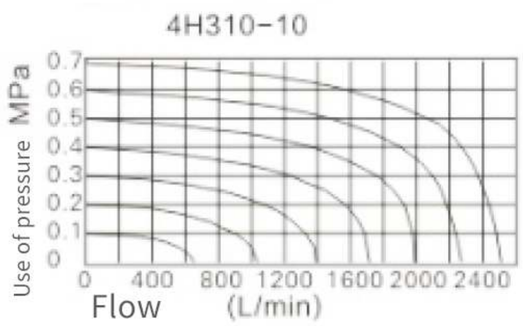

Installation and use

1) Five-port, three-position manual reset type manual valve uses spring steel ball positioning, relatively easy to switch, please note that the use of excessive force does not lead to control position error caused by misoperation.

2) When using the panel installation, the gasket can be removed or retained accor ding to the specific situation.

3) Refer to the following chart for various installation methods. Special note: the thickness of the mounting plate and the size of the mounting hole diameter when the panel is fixed.

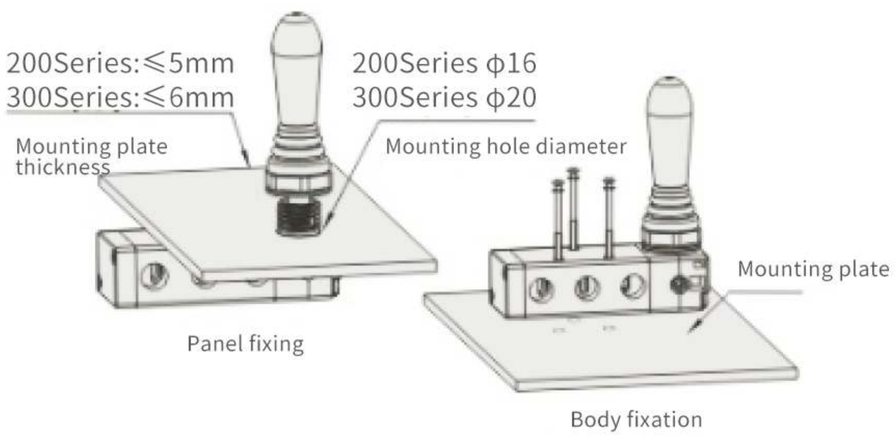

Standard Specification

Model	210-06	230-06	210-08	230-08	310-08	330-08	310-10	330-10
Working medium	Air (filtered by a 40um or higher filter)							
Action mode	Manual direct-acting type							
*Pipe diameter	Inlet = Outlet Exhaust = G1/8		Inlet = Outlet = G1/4 Exhaust = G1/8		Inlet = Outlet Exhaust = G1/4		Inlet=Outlet=G3/8 Exhaust=G1/4	
Effective cross-sectional area	14.0mm² (Cv=0.78)	12.0mm² (Cv=0.67)	16.0mm² (Cv=0.89)	12.0mm² (Cv=0.67)	25.0mm² (Cv=1.39)	18.0mm² (Cv=1.00)	30.0mm² (Cv=1.67)	18.0mm² (Cv=1.00)
Number of positions	Five mouths and two seats	Five mouths of three	Five mouths and two seats	Five mouths of three	Five mouths and two seats	Five mouths of three	Five mouths and two seats	Five mouths of three
**Lubrication	Not required							
Use pressure range	0-0.8MPa(-116psi)							
Guaranteed pressure resistance	1.5MPa(215psi)							
Operating temperature C	-20-70℃							
Body material	Aluminum alloy							
Operation swing angle	±15°	±8.5°	±15°	±8.5°	±18°	±10°	±18°	±10°

*Takeover teeth are available in PT and NPT teeth.
**If there is oil lubrication, it cannot be stopped in the middle, and the recommended lubricant is ISOVG32 or the same level of oil.

Model number indication method

4H	2	30C	08
Specification code	Series code	Function code	Catch pipe diameter
4H:Manual reset manual valve 4HA:Spring return manual valve	2:200 3:300	10:Five-port two position 30C:Five-port three-position central closed type 30E:Five-port three-position central exhaust 30P:Five-port three-position central pressurized type	200 Series:06:G1/8" 08:G1/4 300 Series:08:G1/8" 10:G3/8

Internal structure

4H210

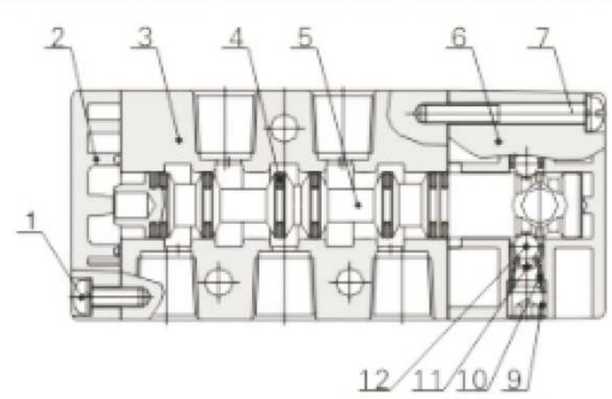

4HA230C/E/P

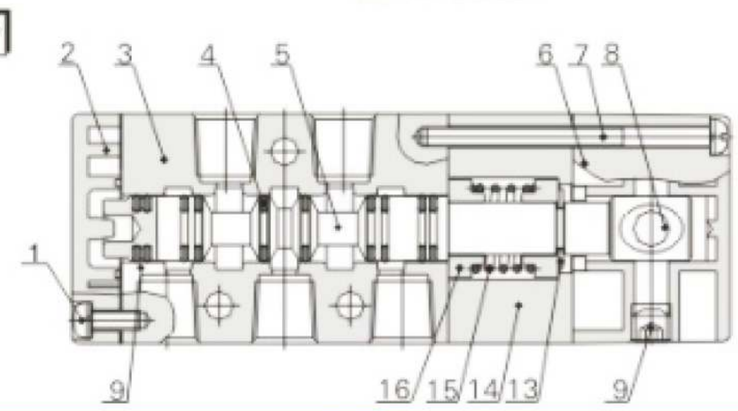

Number	Name	Number	Name
1	Crossed round head screws	9	Hexagon socket stop screws
2	Bottom cover	10	Spring
3	Body	11	Ball Sheath
4	O-ring	12	Steel Ball
5	Shaft core	13	E shaped retainer
6	Manual valve upper cover	14	Side Cover
7	Phillips head screw	15	Spring
8	Shaft head	16	Retainer

Dimensional drawing(mm)

4H210\310、4HA210\310

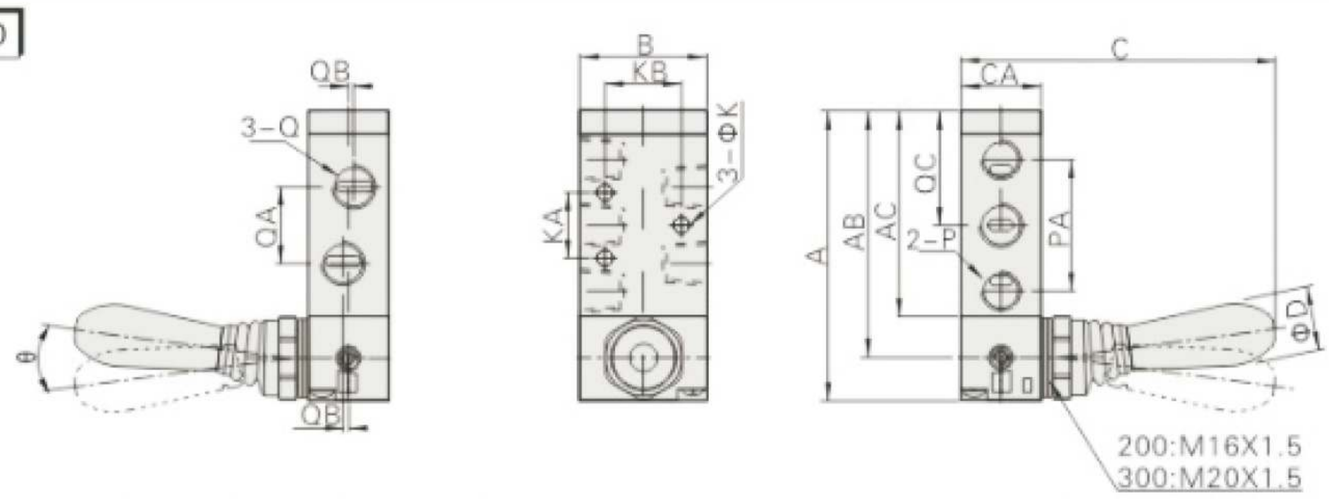

Model \ Symbol	A	AB	AC	B	C	CA	D	K	KA	KB	P	PA	Q	QA	QB	QC	θ
4H210-06 4HA210-06	81.5	69.5	57.5	35	90	22	18	4.3	20	23.5	G1/8	36	G1/8	18	-	32.5	15
4H210-08 4HA210-08	81.5	69.5	57.5	35	90	22	18	4.3	20	23.5	G1/8	36	G1/4	21	1.5	32.5	15
4H310-08 4HA310-08	101	87	73	40	93.5	27	18	4.3	24	27.5	G1/4	45	G1/4	22	-	40.5	18
4H310-10 4HA310-10	101	87	73	40	93.5	27	18	4.3	24	27.5	G1/4	45	G3/8	24	2	40.5	18

4H230C\330C、4H230E\330E

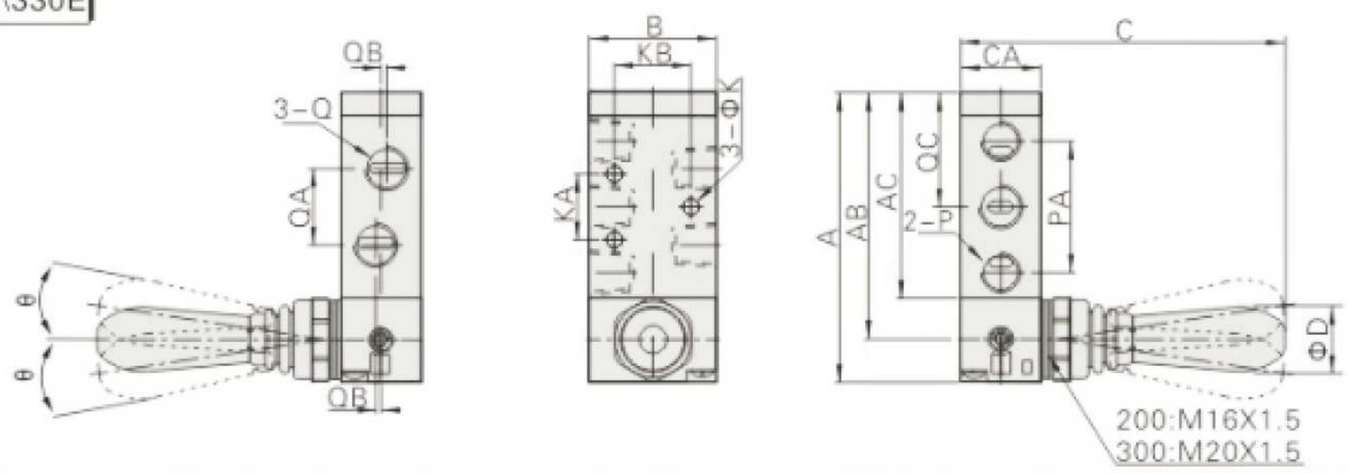

Model \ Symbol	A	AB	AC	B	C	CA	D	K	KA	KB	P	PA	Q	QA	QB	QC	θ
4H230C-06 4H230E-06	81.5	69.5	57.5	35	90.5	22	18	4.3	20	23.5	G1/8	36	G1/8	18	-	32.5	8.5
4H230C-08 4H230E-08	81.5	69.5	57.5	35	90.5	22	18	4.3	20	23.5	G1/8	36	G1/4	21	1.5	32.5	8.8
4H330C-08 4H330E-08	101	87	73	40	94	27	18	4.3	24	27.5	G1/4	45	G1/4	22	-	40.5	10
4H330C-10 4H330E-10	101	87	73	40	94	27	18	4.3	24	27.5	G1/4	45	G3/8	24	2	40.5	10

4HA230C\330C、4HA230E\330E

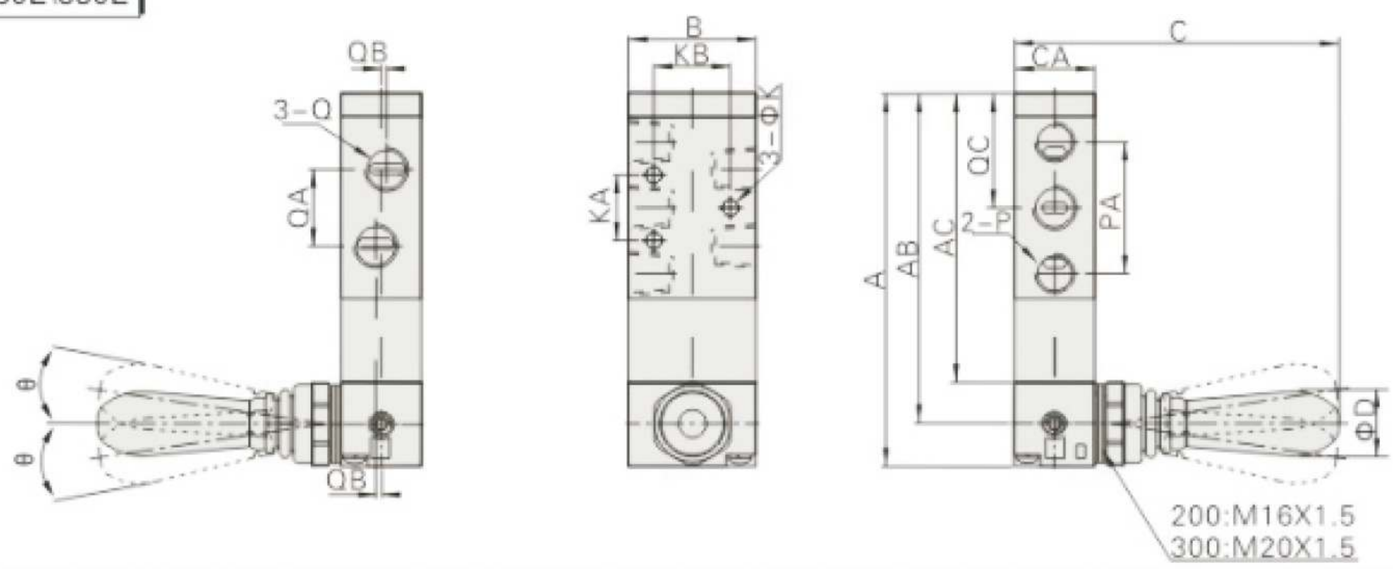

Model \ Symbol	A	AB	AC	B	C	CA	D	K	KA	KB	P	PA	Q	QA	QB	QC	θ
4HA230C-06 4HA230E-06	100.5	88.5	76.5	35	90.5	22	18	4.3	20	23.5	G1/8	36	G1/8	18	-	32.5	8.5
4HA230C-08 4HA230E-08	100.5	88.5	76.5	35	90.5	22	18	4.3	20	23.5	G1/8	36	G1/4	21	1.5	32.5	8.8
4HA330C-08 4HA330E-08	120	106	92	40	94	27	18	4.3	24	27.5	G1/4	45	G1/4	22	-	40.5	10
4HA330C-10 4HA330E-10	120	106	92	40	94	27	18	4.3	24	27.5	G1/4	45	G3/8	24	2	40.5	10

Symbols

Standard Specification

Item/Model	TSV86522	TSV98322
Working medium	Air (filtered by 40um filter)	
Operation mode	Direct-acting type	
Effective cross-sectional area	18mm²(Cv=1.00)	
Use pressure	0-0.8Mpa(0-114Psi)	
Working temperature	0-60℃	

Model number indication method

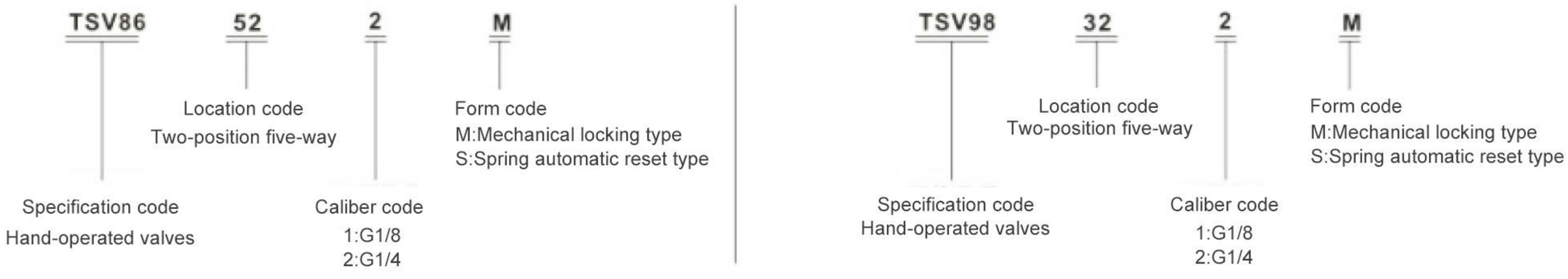

External dimension drawing (mm)

TSV86522

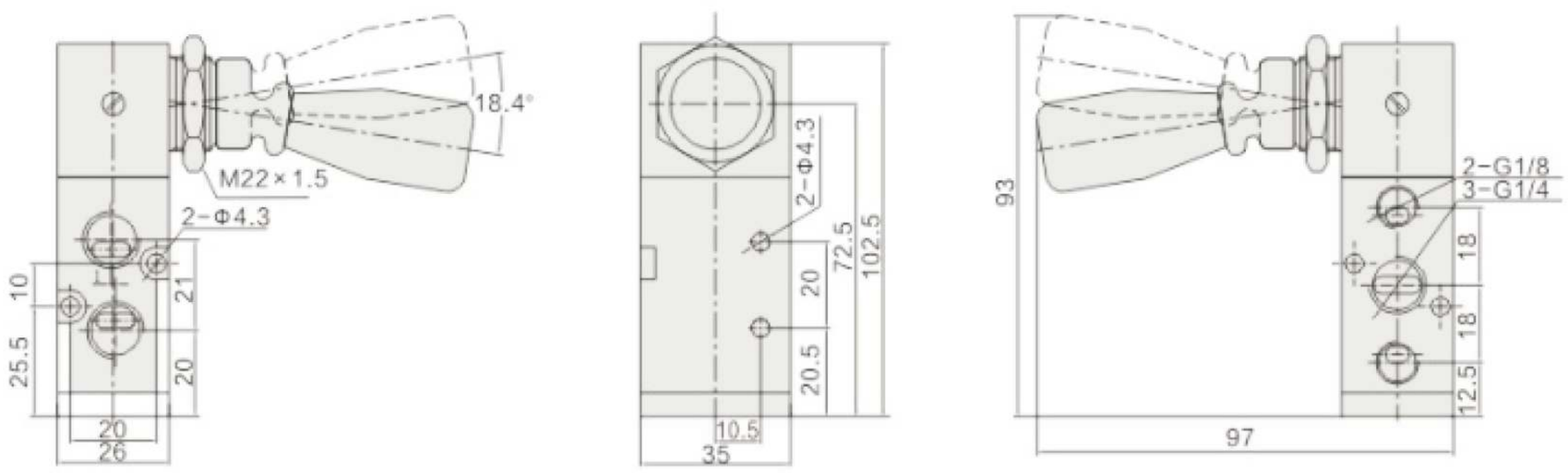

TSV98322

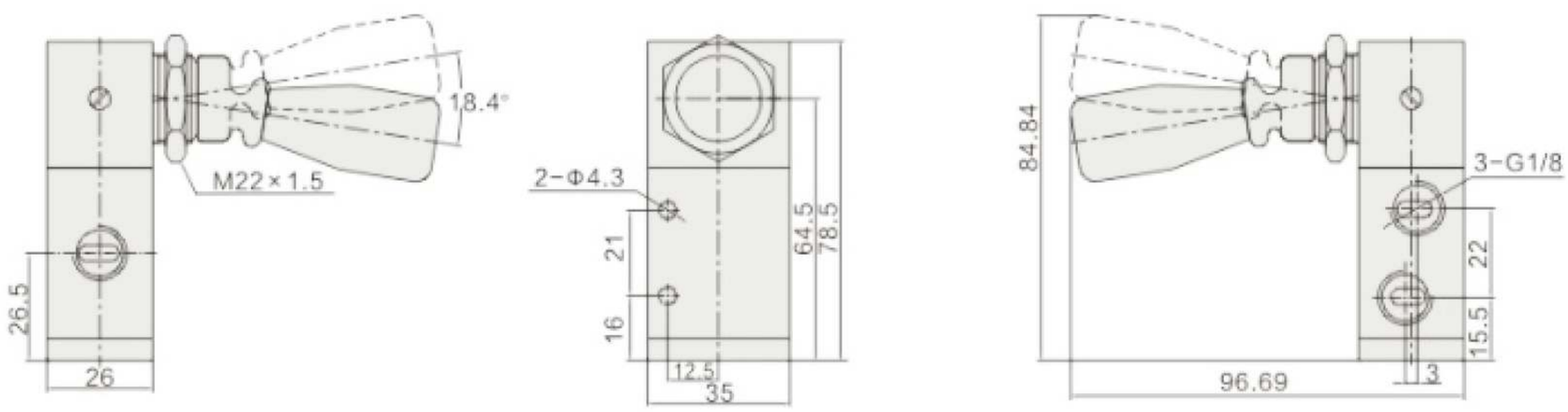

Symbols

Flow Characteristics

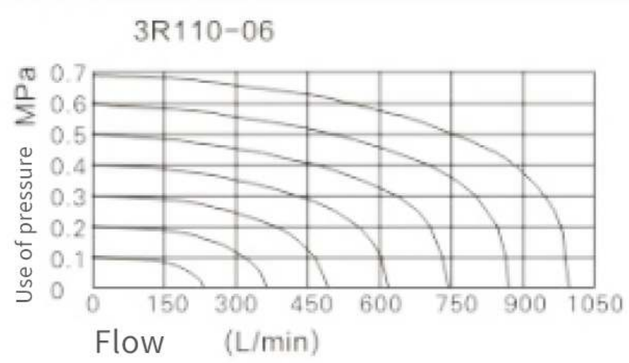

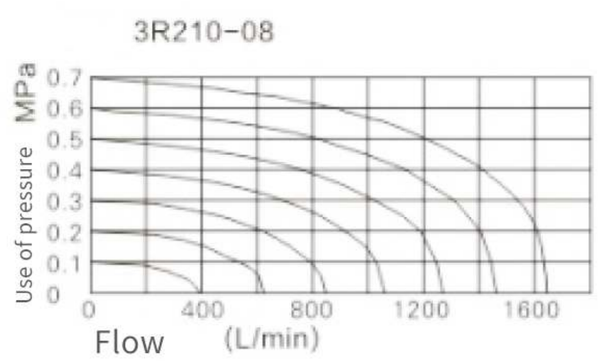

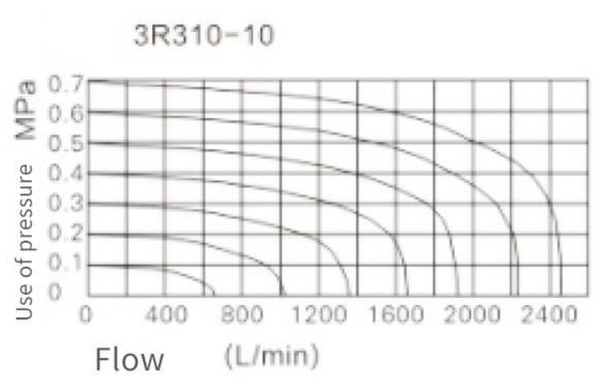

Internal structure

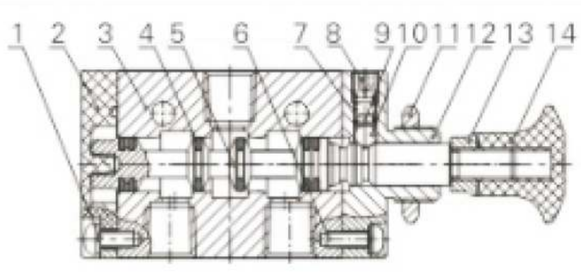

Number	Name	Number	Name	Number	Name
1	Round head screws	6	Round head screws	11	Hexagonal Nuts
2	Bottom cover	7	Spring	12	Top Cap
3	Body	8	Stopper Screws	13	Lock Nuts
4	O-ring	9	Spring Seat	14	Handlebar
5	Shaft core	10	Steel ball		

Standard Specification

Model	3R110-06	3R210-06	3R310-08	3R310-08	3R310-10
Working medium	Air (filtered by a 40um or higher filter)				
Action mode	Manual direct-acting type				
*Pipe diameter	G1/8		G1/4		G3/8
Effective cross-sectional area	12.0²mm(Cv=0.67)	14.0²mm(Cv=0.78)	16.0²mm(Cv=0.89)	25.0²mm(Cv=1.39)	30.0²mm(Cv=1.67)
Number of positions	Five mouths and two seats				
**Lubrication	Not required				
Use pressure range	0-0.8MPa(-116psi)				
Guaranteed pressure resistance	1.5MPa(215psi)				
Operating temperature C	-20-70				
Body material	Aluminum alloy				
***Maximum operation frequency	3 times/second				
Weight	555g	685g	735g		

*Takeover teeth are available in PT and NPT teeth.

**If there is oil lubrication, it cannot be stopped in the middle, and the recommended lubricant is ISOVG32 or the same level of oil.

Model number indication method

3R — Specification code
3R Three-port two-position hand-pull valve

2 — Series code
2:200
3:300
4:400

10 — Location code
10:Second position

08 — Catch pipe diameter
100 Series:06:G1/8
200 Series 06:G1/8"
08:G1/4"
300 Series 08:G1/8"
10:G3/8"

External dimension drawing (mm)

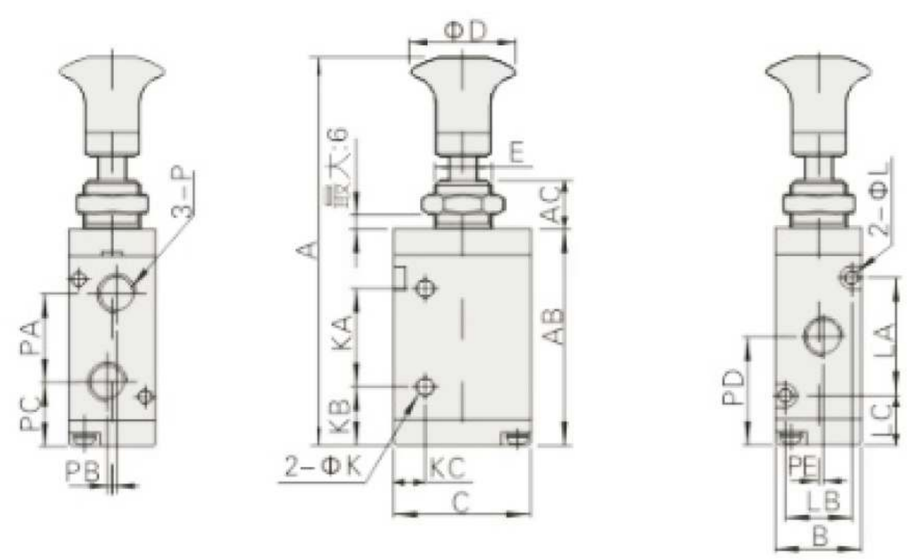

Model \ Symbol	3R110-06	3R210-06	3R210-08	3R310-08	3R310-10
A	87	98	98	106.5	106.5
AB	47.8	57.8	57.8	66.5	66.5
AC	10	10	10	10	10
B	18	22	22	27	27
C	27	35	35	40	40
D	25	25	25	25	25
E	M12×0.75	M14×1.0	M14×1.0	M16×1.0	M16×1.0
K	3.1	4.3	4.3	4.3	4.3
KA	21	25	25	30	30
KB	13	16	16	18	18
KC	7.7	8	8	10	10
L	3.3	3.3	3.3	4.3	4.3
LA	19	30	30	35	35
LB	13	17	17	20	20
LC	14	13.5	13.5	15.5	15.5
P	G1/8	G1/8	G1/4	G1/4	G3/8
PA	16	22.5	22.5	24	24
PB	2	0	0	0	0
PC	15.5	17.5	17.5	21	21
PD	24.5	28.5	28.5	33	33
PE	1	0	1.5	0	2

Symbols

Flow Characteristics

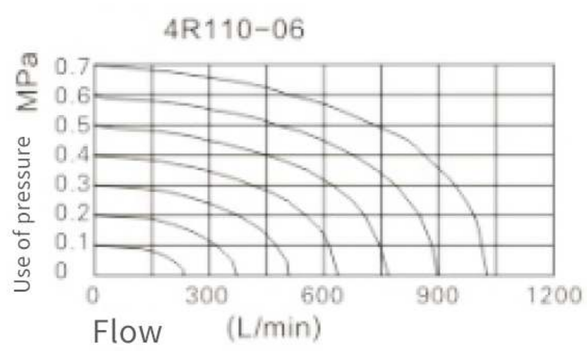

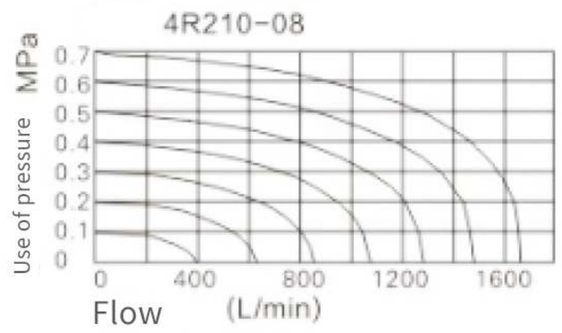

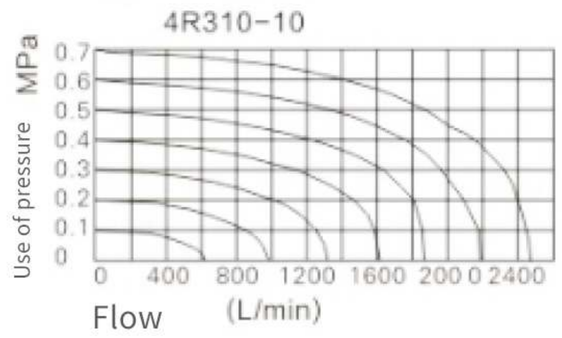

Internal structure

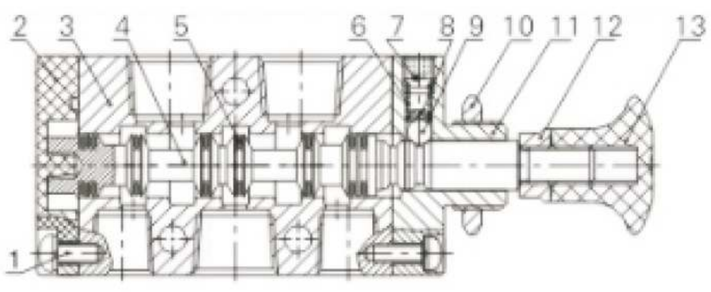

Number	Name	Number	Name	Number	Name
1	Round head screws	6	Round head screws	11	Hexagonal Nuts
2	Bottom cover	7	Spring	12	Top Cap
3	Body	8	Stopper Screws	13	Lock Nuts
4	O-ring	9	Spring Seat	14	Handlebar
5	Shaft core	10	Steel ball		

Standard Specification

Model	4R110-06	4R210-06	4R210-08	4R310-08	4R310-10
Working medium	Air (filtered by a 40um or higher filter)				
Action mode	Manual direct-acting type				
*Pipe diameter	G1/8		G1/4		G3/8
Effective cross-sectional area	12.0mm² (Cv=0.67)	14.0mm² (Cv=0.78)	16.0mm² (Cv=0.89)	25.0mm² (Cv=1.39)	30.0mm² (Cv=1.67)
Number of positions	Five mouths and two seats				
**Lubrication	Not required				
Use pressure range	0-0.8MPa(-116psi)				
Guaranteed pressure resistance	1.5MPa(215psi)				
Operating temperature C	-20-70℃				
Body material	Aluminum alloy				

*Takeover teeth are available in PT and NPT teeth.

**If there is oil lubrication, it cannot be stopped in the middle, and the recommended lubricant is ISOVG32 or the same level of oil.

Model number indication method

4R	2	10	08
Specification code	Series code	Location code	Catch pipe diameter
4R Three-port two-position hand-pull valve	2:200 3:300 4:400	10:Second position	100 Series:06:G1/8 200 Series 06:G1/8" 08:G1/4" 300 Series 08:G1/8" 10:G3/8"

External dimension drawing (mm)

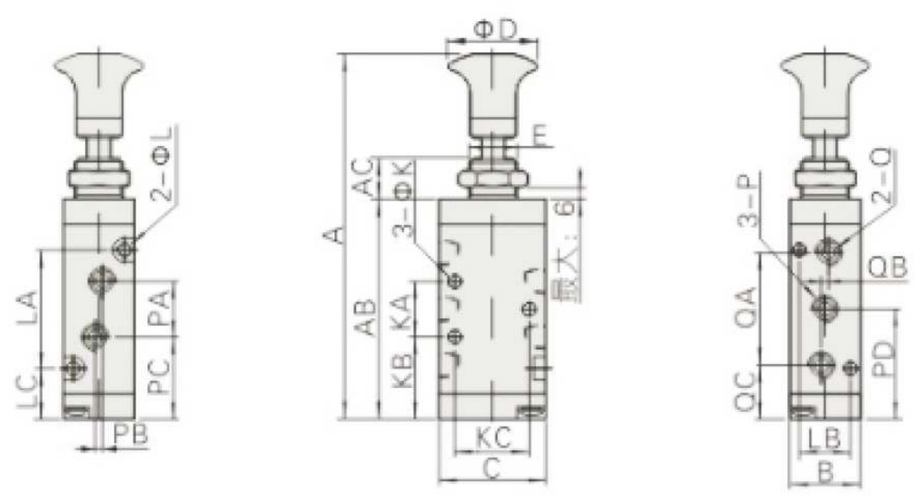

Model \ Symbol	4R110-06	4R210-06	4R210-08	4R310-08	4R310-10
A	98	106	106	121.5	121.5
AB	58.8	65.8	65.8	81	81
AC	10	10	10	10	10
B	18	22	22	27	27
C	27	35	35	40	40
D	25	25	25	25	25
E	M12×0.75	M14×1.0	M14×1.0	M16×1.0	M16×1.0
K	3.3	4.3	4.3	4.3	4.3
KA	14	20	20	24	24
KB	22	22.5	22.5	28.5	28.5
KC	19	23.5	23.5	27.5	27.5
L	3.3	3.3	3.3	4.3	4.3
LA	30	38	38	50	50
LB	13	17	17	20	20
LC	14	13.5	13.5	15.5	15.5
P	G1/8	G1/8	G1/8	G1/4	G1/4
PA	16	18	21	22	24
PB	3	0	3	0	4
PC	21	23.5	22	29.5	28.5
PD	29	32.5	32.5	40.5	40.5
Q	G1/8	G1/8	G1/4	G1/4	G3/8
QA	28	36	36	45	45
QB	2	0	0	0	0
QC	15	14.5	14.5	18	18

Standard Specification

Model	HSV06	HSV08	HSV10	HSV15	HSV20	HSV25
Working medium	Air (filtered by a 40um or higher filter)					
Action mode	Manual direct-acting type					
*Pipe diameter	G1/8	G1/4	G3/8	G1/2	G1/8	G1
Effective cross-sectional area	12.0mm² (Cv=0.67)	40.0mm² (Cv=2.20)	62.0mm² (Cv=3.50)	140.0mm² (Cv=7.80)	250.0mm² (Cv=13.80)	392.0mm² (Cv=21.78)
Number of positions	Five mouths and two seats					
**Lubrication	Not required					
Use pressure range	0-1.0MPa(-145psi)					
Guaranteed pressure resistance	1.5MPa(215psi)					
Operating temperature ℃	-20-70℃					
Body material	Aluminum alloy					

*Takeover teeth are available in PT and NPT teeth.
**If there is oil lubrication, it cannot be stopped in the middle, and the recommended oil is ISOVG32 or the same grade.

Symbols

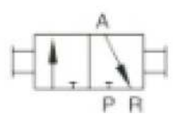

Product Features

1.Multiple internal and external threaded connection forms, suitable for different piping systems.
2.Smooth sliding direction, good hand feeling.
3.Large effective circulation area.
4.Spool surface hard anodizing, valve body surface anodizing treatment,long color retention time.

Model number indication method

HSV	08	SS
Specification code	Catch pipe diameter	Function code
HSV:Hand slide valve	06:G1/8 08:G1/4 10:G3/8 15:G1/2 20:G3/4 25:G1	Blank: Standard type SS: Double external teeth type FF:Double inner tooth type SF:External internal tooth type

External dimension drawing (mm)

External internal thread type (SF)

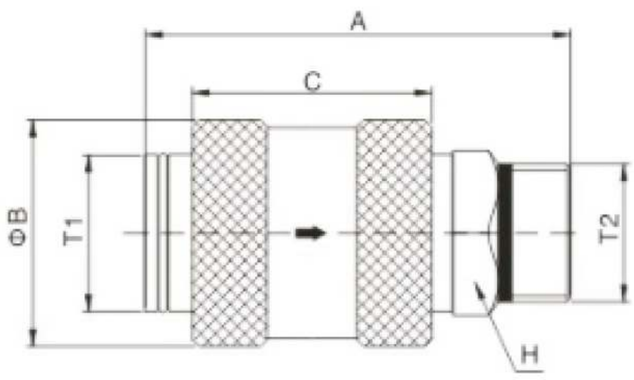

Double internal tooth type (FF)

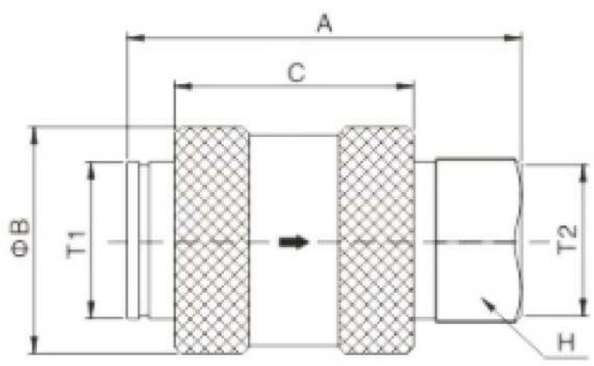

Double external tooth type (SS)

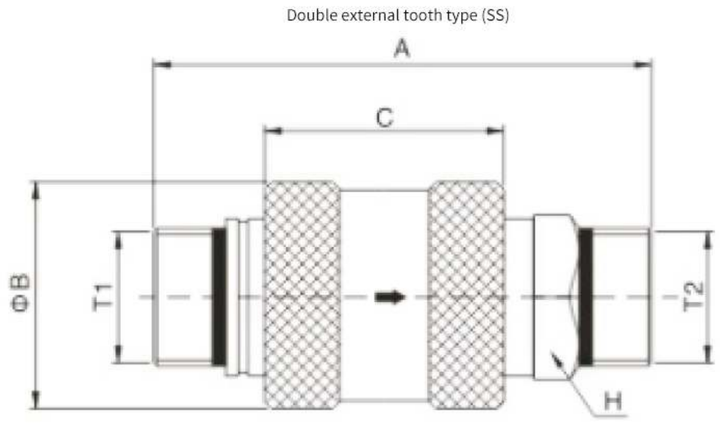

Model \ Symbol	A	B	C	H	T1	T2
HSV-06SF	49	23.5	26.5	17	G1/8	PT1/8
HSV-06FF	42	23.5	26.5	17	G1/8	G1/8
HSV-06SS	57	23.5	26.5	17	PT1/8	PT1/8
HSV-08SF	58	27	32	19	G1/4	PT1/4
HSV-08FF	56	27	32	19	G1/4	G1/4
HSV-08SS	68	27	32	19	PT1/4	PT1/4
HSV-10SF	58	30	32	21	G3/8	PT3/8
HSV-10FF	49	30	32	21	G3/8	G3/8
HSV-10SS	68	30	32	21	PT3/8	PT3/8
HSV-15SF	65	34	36.5	25	G1/2	PT1/2
HSV-15FF	60	34	36.5	25	G1/2	G1/2
HSV-15SS	76	34	36.5	25	PT1/2	PT1/2

Standard Specification

Model	4HV2-06L	4HV2-08L	4HV3-08L	4HV3-10L	4HV4-15L	4HV4-20L
Working medium	Air (filtered by a 40um or higher filter)					
Operation mode	Manual direct-acting type					
Pipe diameter	PT1/8	PT1/4	PT1/4	PT3/8	PT1/2	PT3/4
Effective cross-sectional area	14.0mm² (Cv=0.78)	14.0mm² (Cv=0.78)	30.0mm² (Cv=1.67)	33.0mm² (Cv=1.83)	88.0mm² (Cv=4.89)	95.0mm² (Cv=5.27)
Number of positions	Four mouth two, four mouth three					
**Lubrication	Not required					
Operating pressure range	0-1.0MPa(0-145psi)					
Guaranteed pressure resistance	1.5MPa(215psi)					
Operating temperature C	-20-70					
Working angle	90° (54° for three of four mouths)					

*Takeover teeth are available in PT and NPT teeth.
**If there is oil lubrication, it cannot be stopped in the middle, and the recommended oil is ISOVG32 or the same grade.

Symbols

Four mouths and two seats

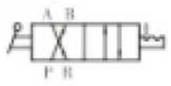

Four-port two-position with lock type

Four mouth three middle seal type

Four-port three-piece mid-seal type with locking type

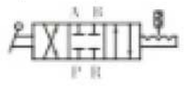

Product Features

1、The direction of rotation is light, good hand feeling, accurate positioning.
2、Large effective circulation area, small pressure loss.
3、Large effective circulation area.
4、Two kinds of installation forms are available: panel and bottom, panel installation with installation nut.

Flow characteristics

2 Series

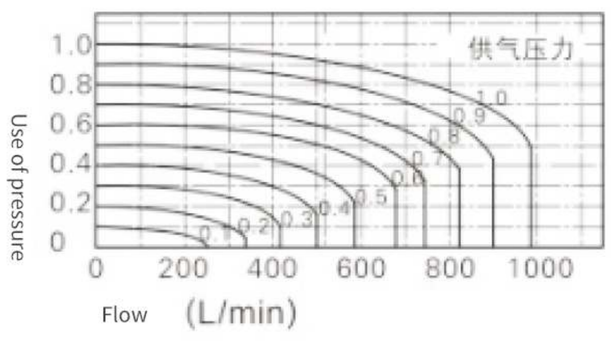

3 Series

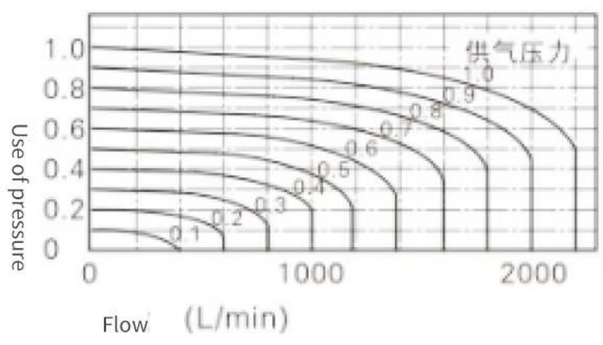

4 Series

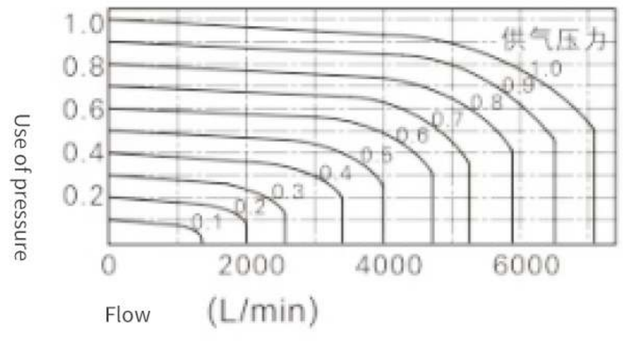

Model number indication method

4HV	2	30	06	S	L
Specification code	Series code	Number of positions	Catch pipe diameter	Installation form	With lock code
4HV:Hand turn valve	2:200 3:300 4:400	10:Four days three 30:Four mouth three	2Series:06:PT1/8 08:PT1/4 3Series:08:PT1/8 10:PT1/4 4Series:15:PT1/8 20:PT1/4	Blank:Valve body mounting S:Panel Mount	Blank:No lock attached L:Locked

Internal structure

4HVL

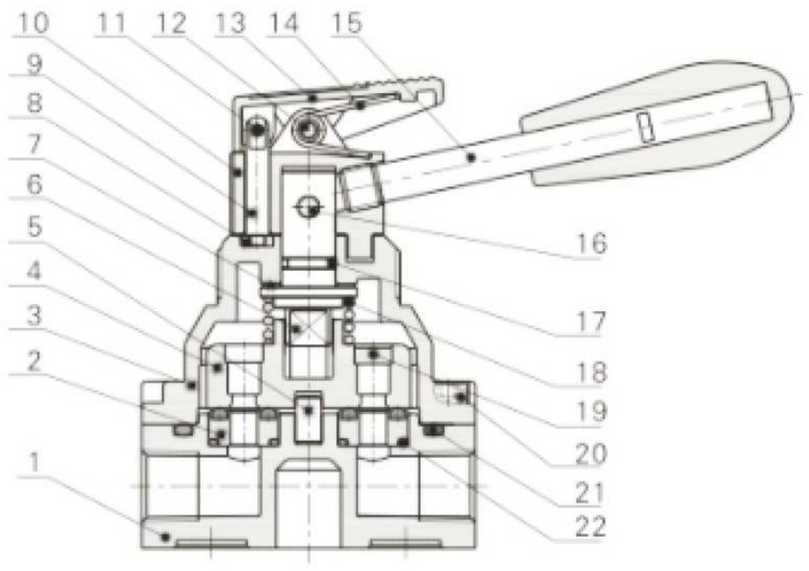

Serial number	Name	Serial number	Name	Serial number	Name
1	Body	9	Positioning locks	17	Spindle O-rings
2	Seal seat	10	Valve cap	18	Spring
3	Valve cover	11	Spring pin	19	Sealing iron sheet
4	Spool	12	Pin I	20	Screws
5	Cylindrical pin	13	top cover	21	Body O-ring
6	Spindle	14	Spring	22	Seal seat O-ring
7	Gasket	15	Handle		
8	Positioning iron piece	16	Pin two		

External dimension drawing (mm)

4HV Series

Valve body mounted type

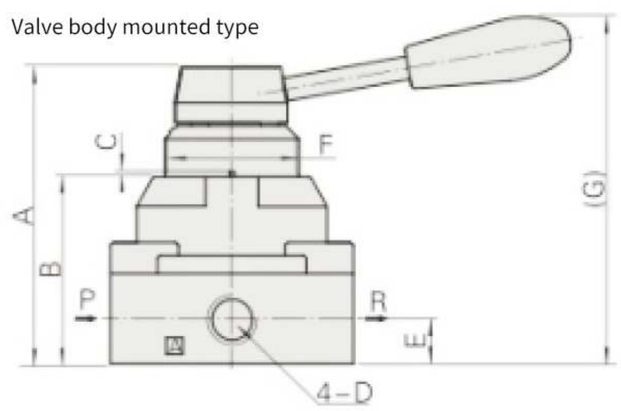

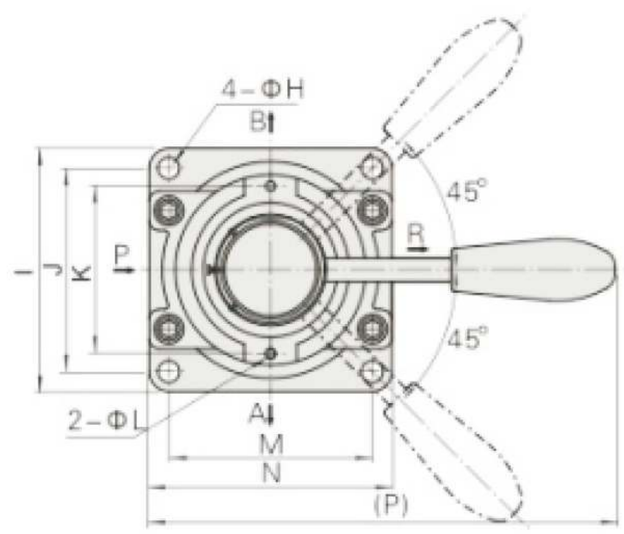

Panel Mount Type

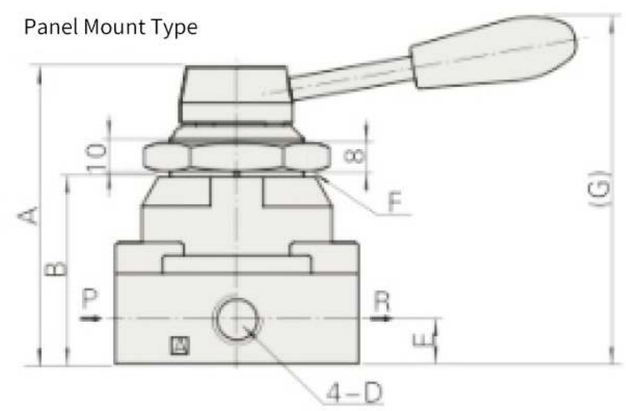

Model \ Symbol	A	B	C	D	E	F	G	H	I	J	K	L	M	N	P
4HV2□□-06	73	45	1.5	PT1/8	11.5	M34 × 1.5	92.5	5.5	62	49	40	3	49	62	120
4HV2□□-08	73	45	1.5	PT1/4	11.5	M34 × 1.5	92.5	5.5	62	49	40	3	49	62	120
4HV3□□-08	88.5	56	1.5	PT1/4	13.5	M40 × 1.5	104	6.5	74	62	51	3	62	74	140
4HV3□□-10	88.5	56	1.5	PT3/8	13.5	M40 × 1.5	104	6.5	74	62	51	3	62	74	140
4HV4□□-15	110	72	2	PT1/2	18	M52 × 1.5	128	6.5	102	89	64	3	81	94	160
4HV4□□-20	110	72	2	PT3/4	18	M52 × 1.5	128	6.5	102	89	64	3	81	94	160

4HVL Series

Valve body mounted type

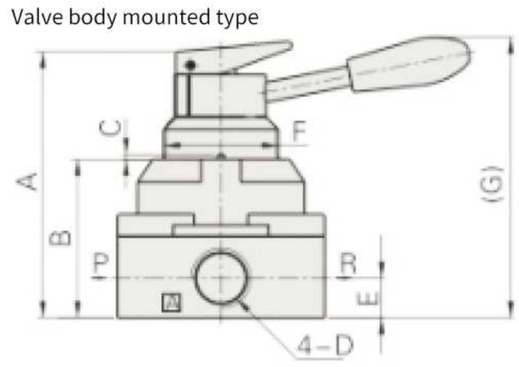

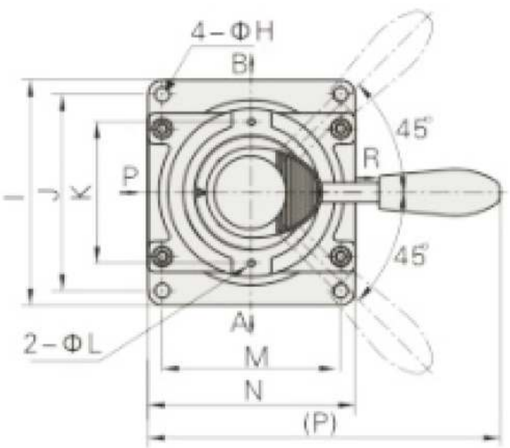

Panel Mount Type

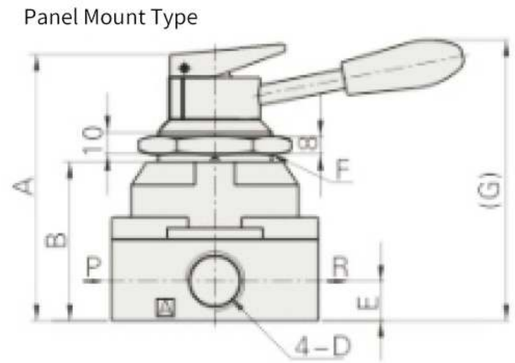

Model \ Symbol	A	B	C	D	E	F	G	H	I	J	K	L	M	N	P
4HV2□□-06L	84	45	1.5	PT1/8	11.5	M34 × 1.5	92.5	5.5	62	49	40	3	49	62	120
4HV2□□-08L	84	45	1.5	PT1/4	11.5	M34 × 1.5	92.5	5.5	62	49	40	3	49	62	120
4HV3□□-08L	99	56	1.5	PT1/4	13.5	M40 × 1.5	104	6.5	74	62	51	3	62	74	140
4HV3□□-10L	99	56	1.5	PT3/8	13.5	M40 × 1.5	104	6.5	74	62	51	3	62	74	140
4HV4□□-15L	121	72	2	PT1/2	18	M52 × 1.5	128	6.5	102	89	64	3	81	94	160
4HV4□□-20L	121	72	2	PT3/4	18	M52 × 1.5	128	6.5	102	89	64	3	81	94	160

Model	HV200A-02	HV230A-02	HV200B-02	HV230B-02
Working medium	Air (filtered by a 40um or higher filter)			
Action mode	Manual control			
Pipe diameter	Inlet = Outlet = PT1/4			
Use pressure range	0.15-0.8MPa(21~114psi)			
Number of positions	Two-position four-way	Three-position four-way	Two-position four-way	Three-position four-way
Operating temperature	-10-60			
Guaranteed pressure resistance	1.5MPa(215psi)			

Model	HV300-02	HV330-02	HV300-03	HV330-03	HV300-04	HV330-04
Working medium	Air (filtered by a 40um or higher filter)					
Action mode	Manual control					
Pipe diameter	PT1/4	PT1/4	PT3/8	PT3/8	PT1/2	PT1/2
Use pressure range	0.15-0.8MPa(21~114psi)					
Number of positions	Two-position four-way	Three-position four-way	Two-position four-way	Three-position four-way	Two-position four-way	Three-position four-way
Operating temperature	-10-60					
Guaranteed pressure resistance	1.5MPa(215psi)					

Symbols

Two-position four-way

Three-position four-way center seal type

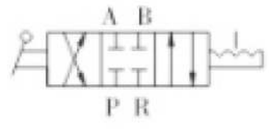

Model number indication method

HV	2	00	A	-	02	-	P
Specification code	Series code	Number of positions	Function code		Catch pipe diameter		Conduit type
HV:Hand turn valve	2:200 3:300	00:Two four-way 30:Three four-way	Empty:Basic type four side Interface A:Bottom Interface B:Both sides connect C		02:PT1/4 03:PT3/8 04:PT1/2		Empty: Iron handle P:Plastic handle

External dimension drawing (mm)

HV200A-02

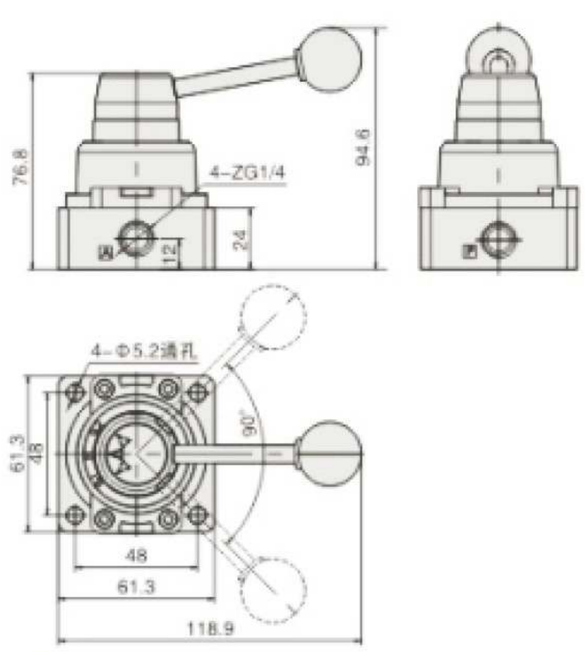

HV200B-02

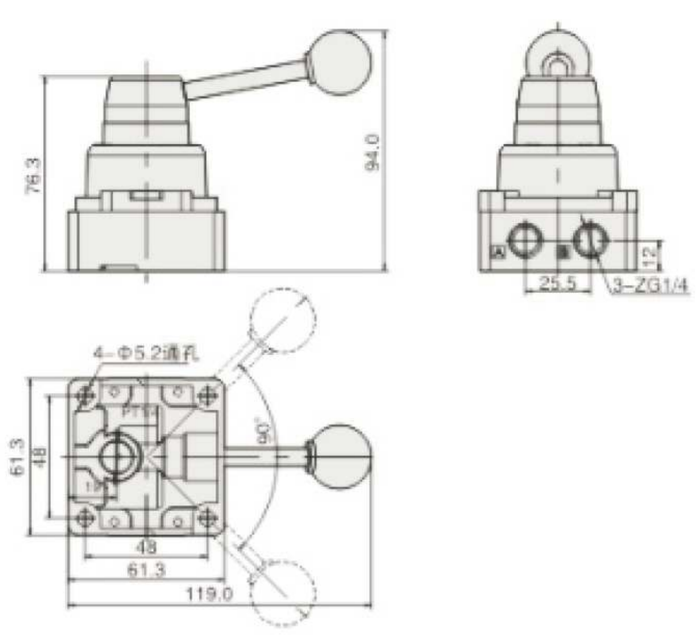

HV300-02/03/04
HV330-02/03/04

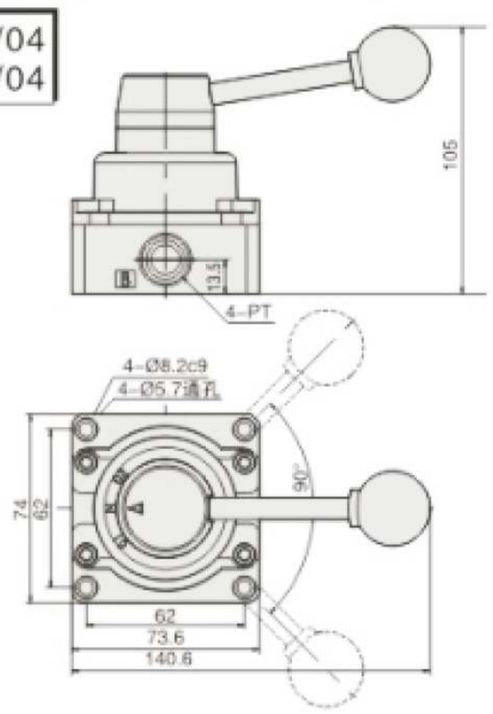

HV300-02/03/04-P
HV330-02/03/04-P

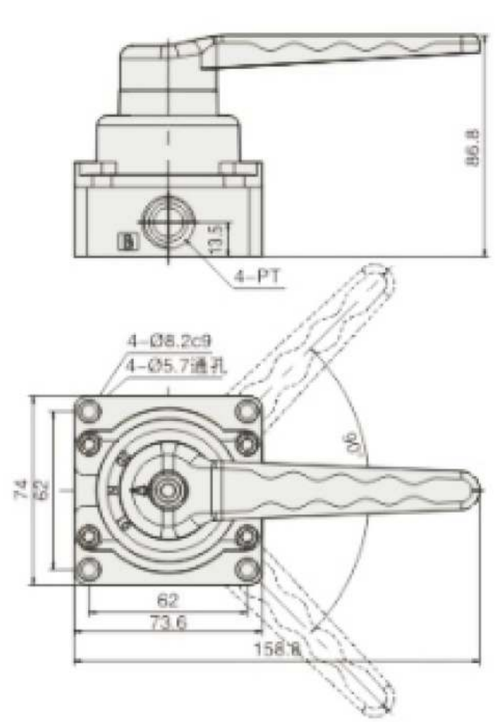

Standard Specification

Model	K24R8-L8	K34R8-L8	K24R8-L8D	K34R8-L8D	K24R8-L8S	K34R8-L8S
Working medium	Air (filtered by a 40um or higher filter)					
Action mode	Manual control					
Pipe diameter	Inlet = Outlet = PT1/4					
Use pressure range	0.15-0.8MPa(21~114psi)					
Number of positions	Two-position four-way	Three-position four-way	Two-position four-way	Three-position four-way	Two-position four-way	Three-position four-way
Operating temperature	-10-60					
Guaranteed pressure resistance	1.5MPa(215psi)					

Symbols

Two-position four-way

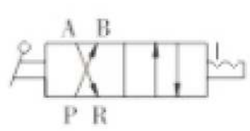

Three-position four-way center seal type

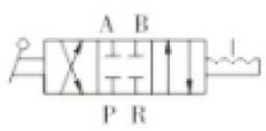

Model number indication method

K	24	R8	-	L8	D
Specification code	Series code	Function code		Catch pipe diameter	Conduit type
K: Pneumatic components	24:Two four-way 34:Three four-way	R8:Hand turn valve L8:Receiver type		L8:G1/4	Empty: Both sides take over. D:Bottom receiver S:Four side receiver

External dimension drawing (mm)

K34R6-8

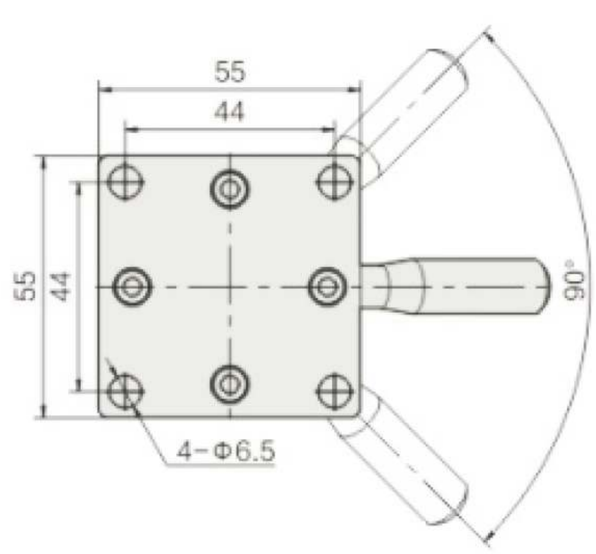

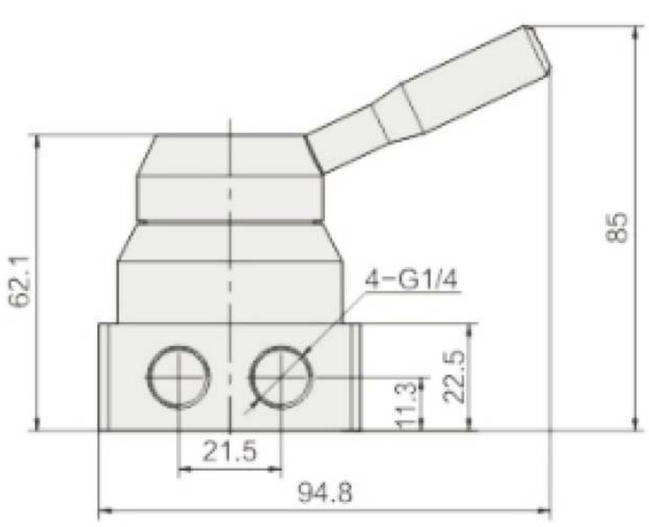

K34R6-8D

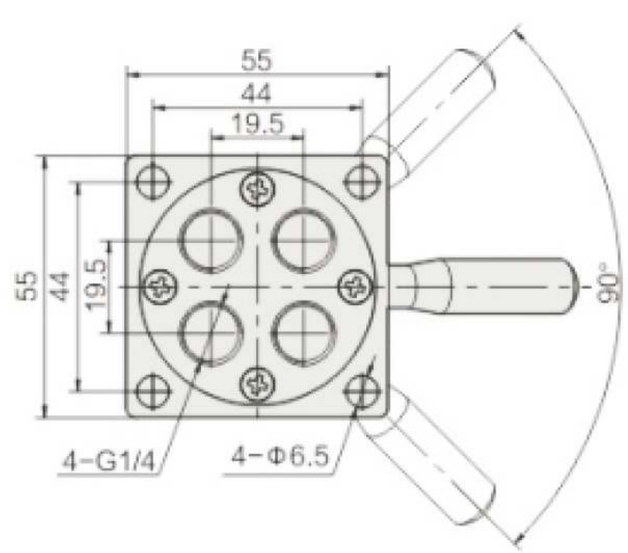

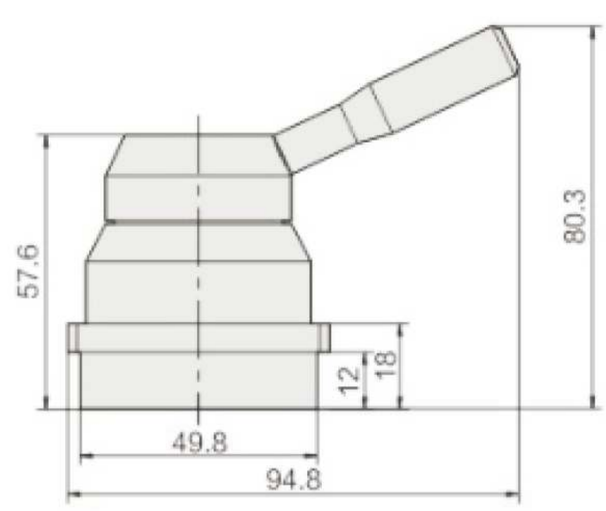

K34R5-8S

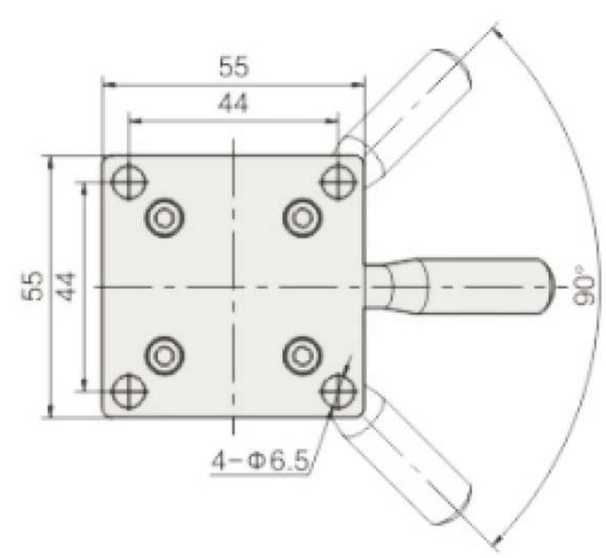

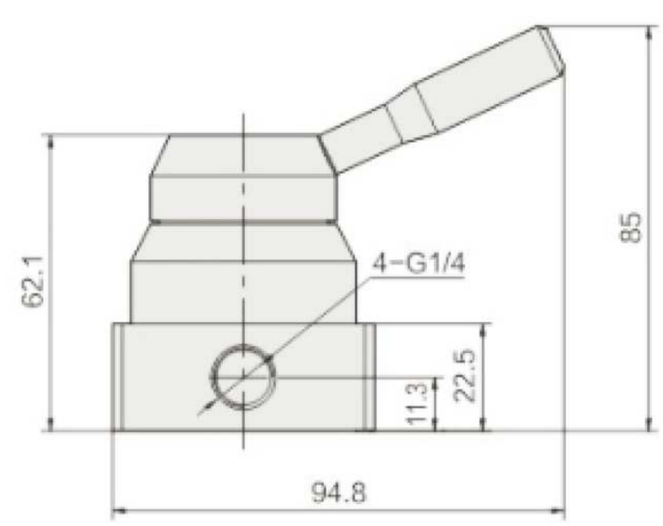

Standard Specification

Model		M3B	M3C	M3D	M3R	M3L	M3PF	M3PL	M3HS
Working medium		Air (filtered by a 40um or higher filter)							
Operation mode		External control direct-acting type							
Pipe diameter		05:M5:06:G1/8;08:G1/4							
Limited cross-sectional area	Mini Type	05:2.5mm²(Cv=0.14)							
	110	068.0mm²(Cv=0.45)							
	210	06:9.0mm²(Cv=0.50): 08:12.0mm²(Cv=0.67)							
Number of positions		Three mouths and two bits							
Lubrication		Not required							
Operating pressure range		0~1.0MPa(0~145psi)							
Guaranteed pressure resistance		1.5MPa(215psi)							
Operating temperature		-20-70℃							
Body material		Aluminum alloy							

1.According to the tube teeth type G can be selected.
2.If there is oil lubrication, it cannot be stopped in the middle, and the lubricant is ISOVG32 or the same level of oil.

Model number indication method

General type.

M3 PM 210 06 R

Structure code

M3:M-type three-port two-position

Specification code

B:Basic type mechanical valve
C:Long-handle type manual valve
D:Short-handle type manual valve
Y:Program kidney type manual valve
R:Roller lever type mechanical valve
L:One-way roller lever type mechanical valve
PL:Stop and rotate push button type manual valve (only red available)
PP:Push-button type manual valve with convex head PF:Push-button type manual valve with flat head
PM;Mushroom head push button type manual valve
HS:Selector type manual valve

Series code

110:110 series single control
210:210 series single control

Catch pipe diameter

Product Line	Catch pipe diameter
100 Series	06:G1/8
	06:G1/8
200 Series	08:G1/4

Button Color

Product Specifications	Button Color
PL type	R:Red
PP type PF type	R:Red
PM type HS type	G:Green
	B:Black
Other specifications	No such code

Symbols

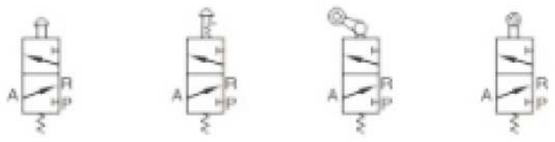

Product Features

1. The exhaust port is located on the body, which is easy to install muffler to reduce noise and pollution
2. M3B, M3R, M3L series of external force required for commutation is provided by external mechanism, which can be used for position detection or travel switch.
3. M3C, M3D, M3Y, M3PF, M3PM, M3PP, M3PL, M3HS series are manually operated, with various structure and shape control heads, convenient for use under different conditions.
4. Sliding column structure, the control force is not affected by the working pressure (i.e. no back pressure),the inner circle seal, good sealing, flexible direction change.
5. No need for oil lubrication.
6. Multi-position installation, easy to install and use.
7. M3C, M3D, M3Y, M3R, M3L series control head for metal material long life, more reliable and stable

Flow Characteristics

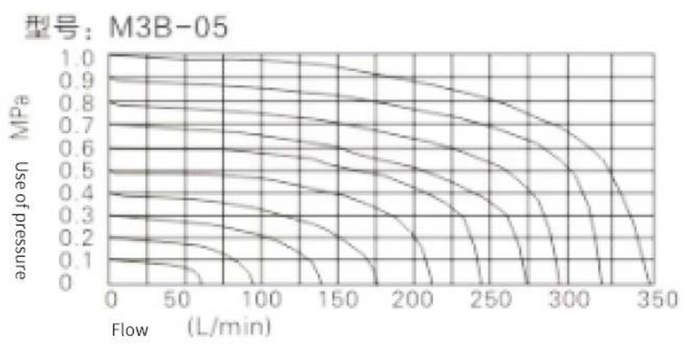

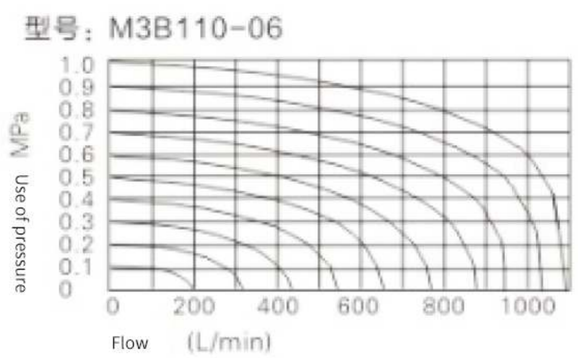

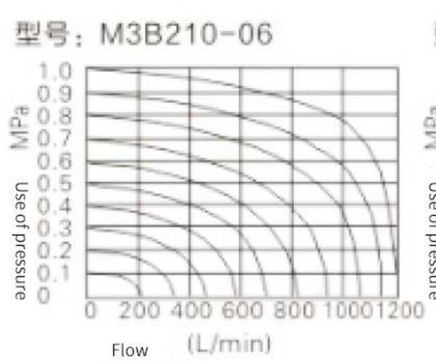

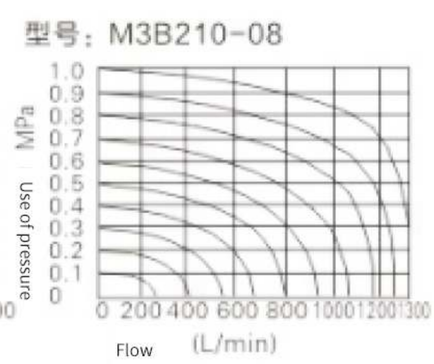

Commutation stroke

Unit: mm

Ordinary type						Mini Type		
Flow	Valve spool stroke	Button travel	Flow	Valve spool stroke	Roller travel	Flow	Valve spool stroke	Roller travel
M3B	2.0-3.3	-	M3R	2.0-3.3	4.6-6.8	M3B05	2.0-3.3	-
M3PF	2.0-3.3	3.8-5.1	M3L	2.0-3.3	5.0-7.8	M3R05	2.0-3.3	6.0-8.5
M3PP	2.0-3.3	3.8-5.1	M3C	2.0-3.3	11.0-16	M3L05	2.0-3.3	7.0-10
M39PM	2.0-3.3	3.8-5.1	M3D	2.0-3.3	5.5-8			
M3PL	2.0-3.3	5.9-7.2						
M3HS	2.0-3.3	5.1-6.14						

Internal structure

M3R21

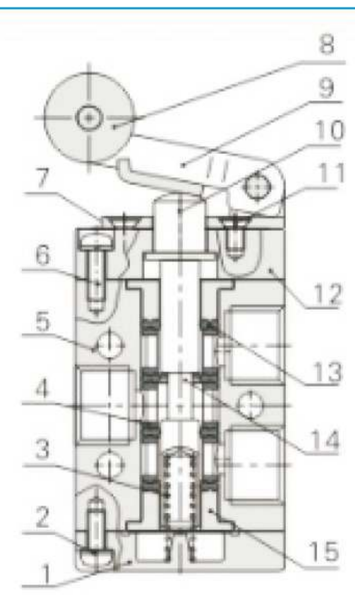

No.	Name	No.	Name
1	Bottom cover	9	Swivel seat
2	Crossed round head screws	10	Shaft head
3	Spring	11	Cross recessed head screws
4	Spacer	12	Front cover
5	Body	13	Shaped O-ring
6	Crossed round head screws	14	Shaft core
7	Rolling mount	15	Positioning block
8	Rollers		

Installation and Use

Body fixing method

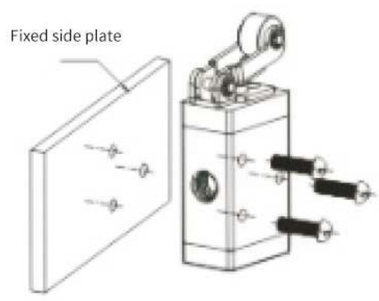

Panel fixing method

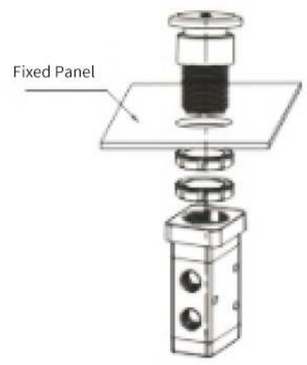

Caution

1)The material of control part is engineering plastic, only manual operation is allowed.

2) M3B, M3C, M3D, M3PM, M3PF, M3PP series are automatic reset. M3Y, M3HS, M3PL manual valves are manual reset. M3PL in the base bet into the treasure position, must rotate the rotary knob to reset.

3) pay attention to the reversing stroke, any external force to make the valve change direction, the base reversing stroke can not exceed the control stroke table specified in the reversing stroke range, otherwise it will cause damage to the valve body.

4) M3L one-way roller valve only a single direction can make the reading switch (from right to left impact). The other direction invalid bump (curved left to right)

5) control head combination can be ordered separately

External specifications of valve body

Ordinary type

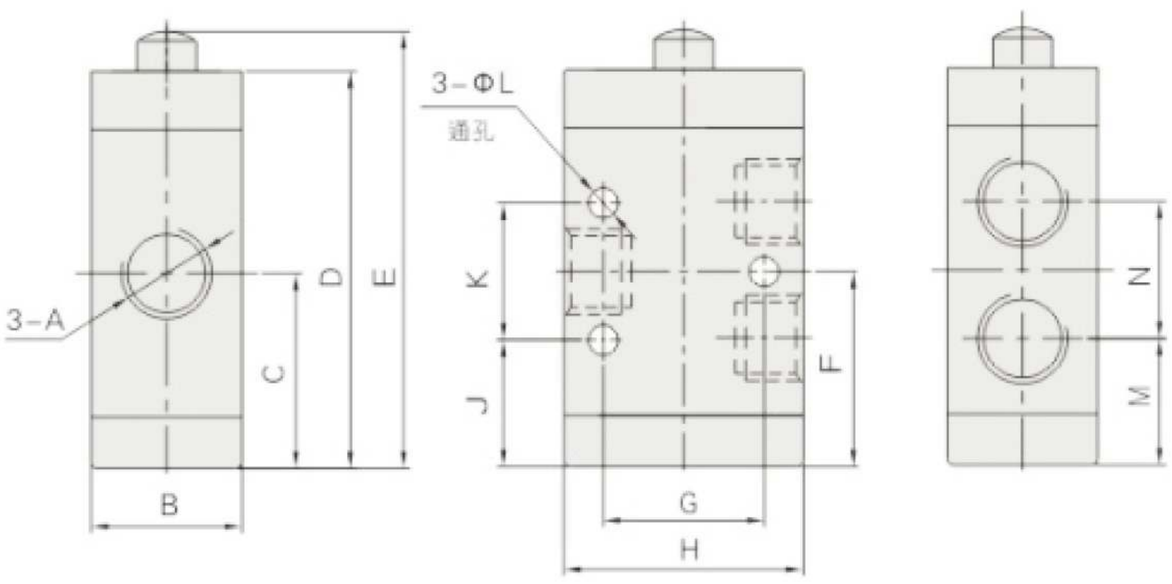

Conformity / Model	M3B110	M3B210
A	06:G1/8	06:G1/8 08:G1/4
B	18	22
C	23.5	28.5
D	46.5	58
E	52	63.8
F	23.5	28.5
G	18	23.5
H	27	35
J	15.5	18.5
K	16	20
L	3.2	4.3
M	15.5	18.5
N	16	20

Mini Control Head External Specifications

Model	M3R05		M3L05	
Order Method	Order Code	Specification	Order Code	Specification
	M3R05-P14A	M3R05 roller lever combination	M3L05-P14A	M3L05 one-way roller lever combination
Applicable Products	M3R05		M3L05	
External dimensions	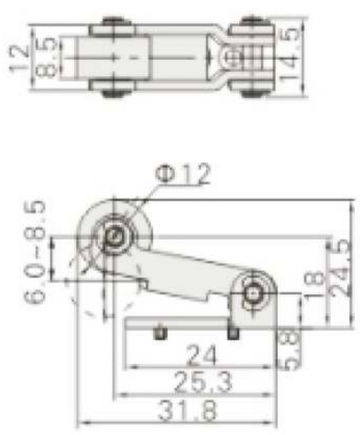		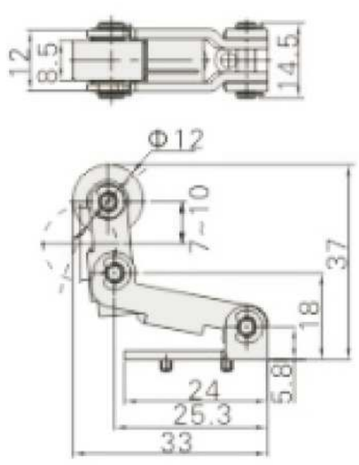	

General type control head external specifications

Model	C long handle type		D Short-handled type		Y crank type	
Order Method	Order Code	Specification	Order Code	Specification	Order Code	Specification
	M3C210-P13A	M3C210 long handle set	M3D210-P13A	M3C\D210 long handle set	M3Y210-P13A	M3Y210 crank combination
Applicable products	M3C110、M3C210		M3D110、M3D210		M3Y110、M3Y210	
External dimensions	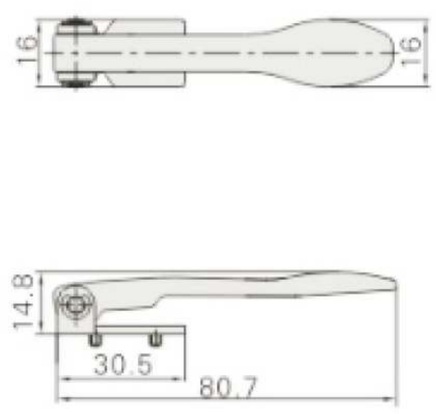		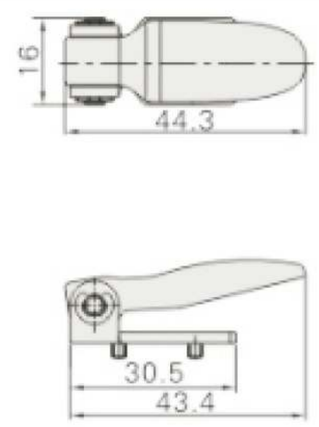		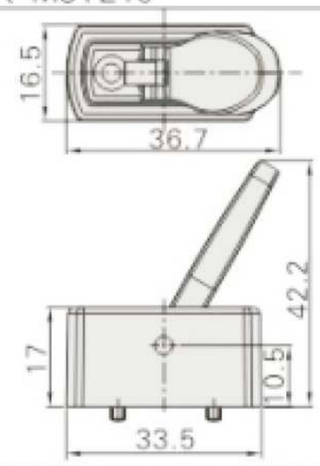	

Model	R roller lever type		L one-way roller lever type	
Order Method	Order Code	Specification	Order Code	Specification
	M3R210-P14A	M3R05 roller lever combination	M3L210-P14A	M3L05 one-way roller lever combination
Applicable products	M3R110、M3R210		M3L110、M3L210	
External dimensions	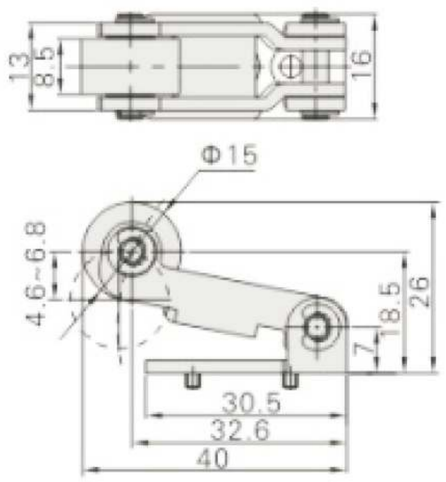		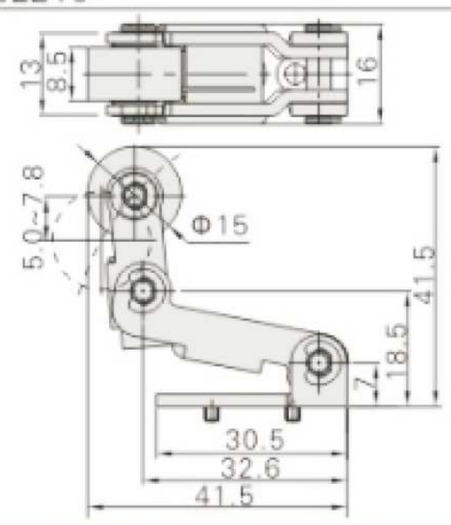	

Model	PP convex head button type		PM mushroom head button type		PL stop rotation button type	
Order Method	Order Code	Specification	Order Code	Specification	Order Code	Specification
	S3PP05-P11A	S3PP flush button combination (green)	S3PM05-P11A	S3PM button combination (green)	S3PL05-P12A	S3PL park and rotate button combination (red)
	S3PP05-P12A	S3PP flush button combination (red)	S3PM05-P12A	S3PM button combination (red)		
	S3PP05-P13A	S3PP flush button combination (black)	S3PM05-P13A	S3PM button combination (black)		
Applicable products	M3PP110、M3PP210		M3PM110、M3PM210		M3PL110、M3PL210	
External dimensions	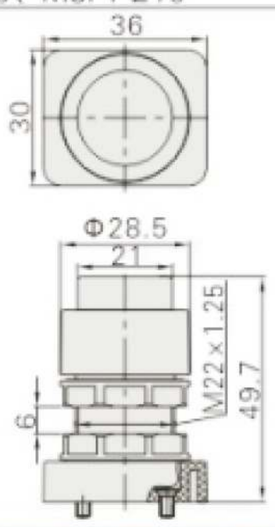		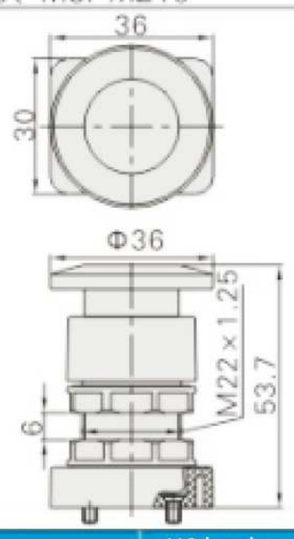		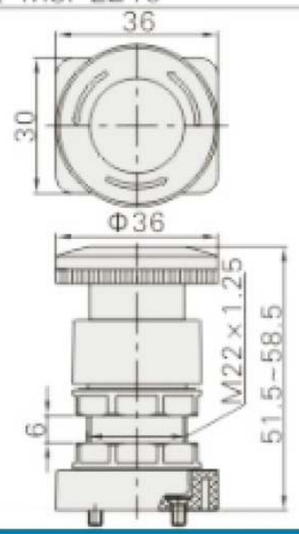	

Model	PF flush button type		HS knob type	
Order Method	Order Code	Specification	Order Code	Specification
	S3PF05-P11A	S3PF flush button combination (green)	S3HS05-P11A	S3HS knob combination (green)
	S3PF05-P12A	S3PF flush button combination (red)	S3HS05-P12A	S3HS knob combination(red)
	S3PF05-P13A	S3PF flush button combination (black)	S3HS05-P13A	S3HS knob combination (black)
Applicable products	M3PF110、M3PF210		M3PF110、M3PF210	
External dimensions	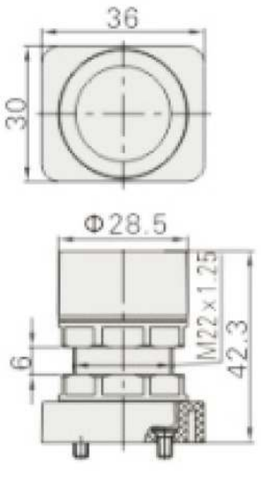		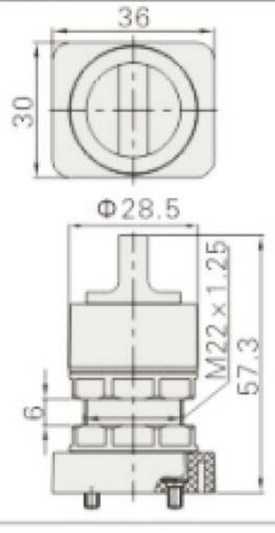	

Standard Specification

Model		M5B	M5C	M5D	M5R	M5L	M5PF	M5PL	M5HS
Working medium		Air (filtered by a 40um or higher filter)							
Operation mode		External control direct-acting type							
Pipe diameter		05:M5:06:G1/8;08:G1/4							
Limited cross-sectional area	Mini Type	05:2.5mm²(Cv=0.14)							
	110	068.0mm²(Cv=0.45)							
	210	06:9.0mm²(Cv=0.50): 08:12.0mm²(Cv=0.67)							
Number of positions		Three mouths and two bits							
Lubrication		Not required							
Operating pressure range		0~1.0MPa(0~145psi)							
Guaranteed pressure resistance		1.5MPa(215psi)							
Operating temperature		-20-70							
Body material		Aluminum alloy							

1 According to the tube teeth type G can be selected.
2 If there is oil lubrication, it cannot be stopped in the middle, and the lubricant is ISOVG32 or the same level of oil.

Symbols

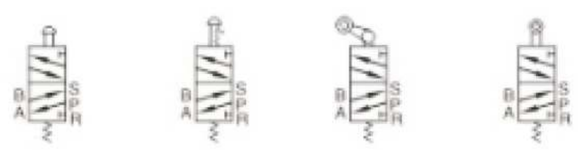

Model number indication method

General type.

M5 PM 210 06 R

Structure code
M5:M-type five-port two-position

Specification code
B:Basic mechanical valve
C:Long-handle type manual valve
D:Short-handle type manual valve
Y:Swing hip type manual valve
R:Roller lever type mechanical valve
L:One-way roller lever type mechanical valve
PL;Stop and rotate push button type manual valve(only red color available)
PP:Push-button type manual valve with convex head
PF:Flat head push button type manual valve
PM:Mushroom head push button type manual valve
HS:Selector type manual valve

Series code
110:110 series single control
210:210 series single control

Catch pipe diameter

Product Line	Catch pipe diameter
100 Series	06:G1/8
	06:G1/8
200 Series	08:G1/4

Button Color

Product Specifications	Button Color
PL type	R:Red
PP type PF type	R:Red
PM type HS type	G:Green
	B:Black
Other specifications	No such code

Product Features

1、The exhaust port is located on the body, which is convenient to install muffler to reduce noise and pollution.
2、The external force required for commutation of M5B, M5R, M5L series is provided by external mechanism, which can be used for position detection or travel switch.
3. M5C, M5D, M5Y, M5PF, M5PM, M5PP, M5PLM5HS series are manually operated, with a variety of structures and shapes of control heads, convenient for use under different c-onditions
4. Sliding column structure, the control force is not affected by the working pressure (i.e. no back pressure), the inner ring seal, good sealing, flexible commutation.
5. No need for oil lubrication.
6. Multi-position installation, easy to install and use.
7. M5C, M5D, M5Y, M5R, M5L series control head is made of metal, long life, more reliable and stable.

Flow Characteristics

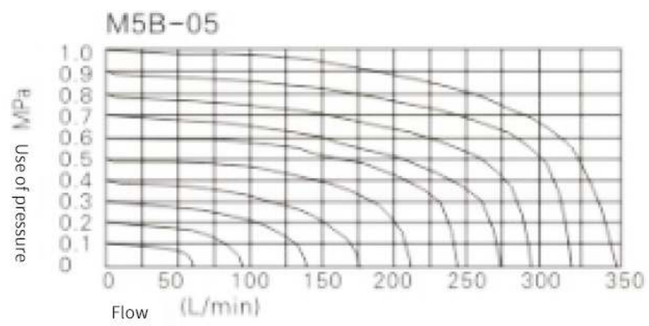

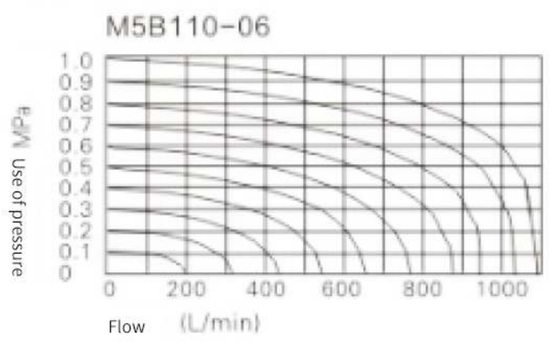

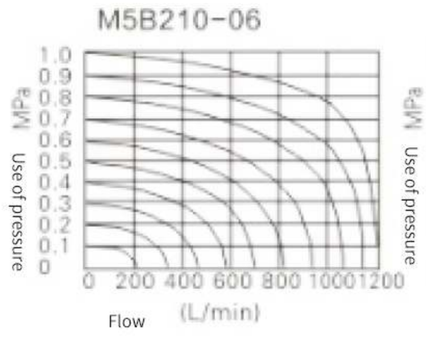

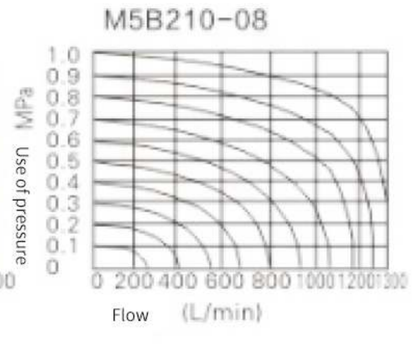

Commutation stroke

Unit: mm

Ordinary type					
Flow	Valve spool stroke	Button travel	Flow	Valve spool stroke	Roller travel
M3B	2.0-3.3	-	M3R	2.0-3.3	4.6-6.8
M3PF	2.0-3.3	3.8-5.1	M3L	2.0-3.3	5.0-7.8
M3PP	2.0-3.3	3.8-5.1	M3C	2.0-3.3	11.0-16
M39PM	2.0-3.3	3.8-5.1	M3D	2.0-3.3	5.5-8
M3PL	2.0-3.3	5.9-7.2			
M3HS	2.0-3.3	5.1-6.14			

Internal structure

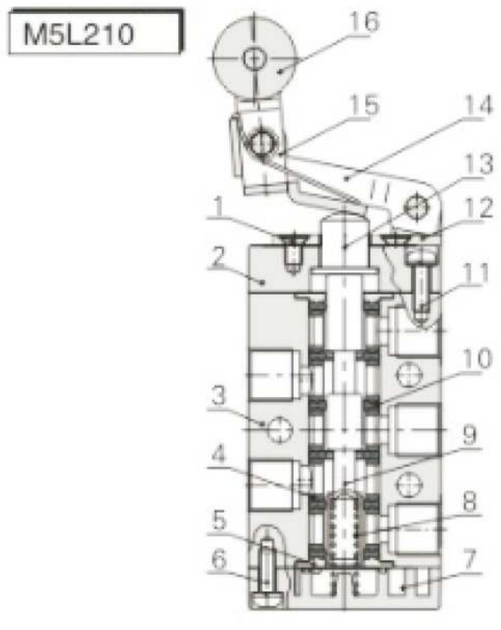

No.	Name	No.	Name
1	Crossed round head screws	9	Shaft core
2	Front cover	10	Shaped O-ring
3	Body	11	Crossed round head screws
4	Spacer	12	Rollers Retainer
5	Positioning block	13	Shaft head
6	Crossed round head screws	14	Swivel seat
7	Bottom cover	15	Rocker arm
8	Spring	16	Roller

Installation and Use

Body fixing method

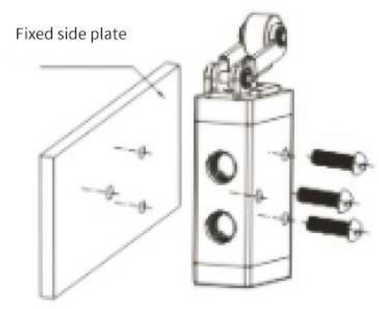

Panel fixing method

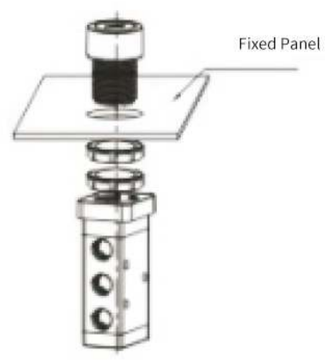

Caution

1) The material of the control part is engineering plastic, and only manual operation is allowed. It is forbidden to use metal impact to make the valve switch.
2) M5B, M5C, M5D, M5PM, M5PF, M5PP series are automatic reset M5Y, M5HS, M5PL Manual valve for manual reset. M5PL in the base bet into the treasure position, must rotate the rotary knob to reset.
3) Pay attention to the reversing stroke, any external force to read the reversing, the base reversing stroke can not exceed the control stroke table specified
The reversing stroke range, otherwise it will cause damage to the valve body.
4) M5L one-way roller valve only a single direction can make the valve switch (from right to left impact).
The other direction is not effective impact (curved left to right).
5)Control head combination can be ordered separately.

External specifications of valve body

Ordinary type

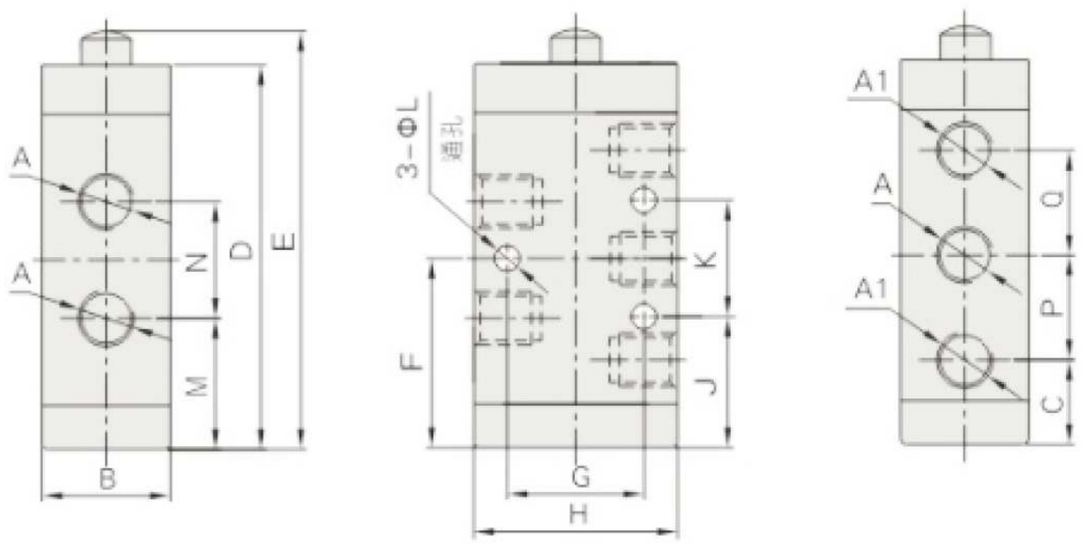

Conformity / Model	M5B110	M5B210
A	06:G1/8	06:G1/8
		08:G1/4
A1	06:G1/8	06:G1/8
		06:G1/8
B	18	22
C	15	14.5
D	57.5	66
E	63	71.8
F	29	32.5
G	18	23.5
H	27	35
J	22	22.5
K	14	20
L	3.2	4.3
M	21	22.5
N	16	20
P	14	18
Q	14	18

Mini Control Head External Specifications

Model	M3R05		M3L05	
Order Method	Order Code	Specification	Order Code	Specification
	M3R05-P14A	M3R05 roller lever combination	M3L05-P14A	M3L05 one-way roller lever combination
Applicable Products	M5R05		M5L05	
External dimensions	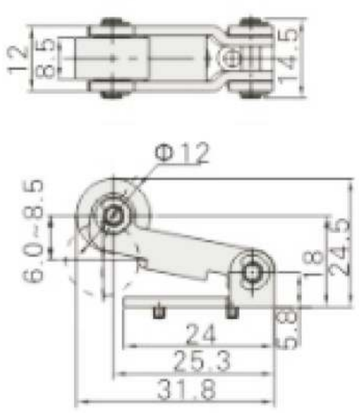		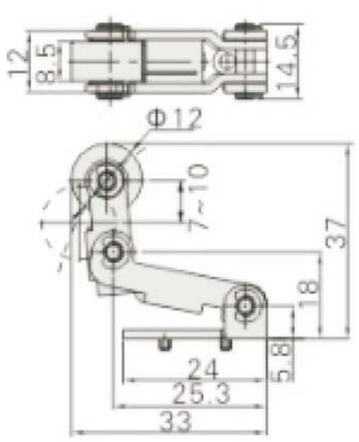	

General type control head external specifications

Model	C long handle type		D Short-handled type		Y crank type	
Order Method	Order Code	Specification	Order Code	Specification	Order Code	Specification
	M3C210-P13A	M3C210长柄组合	M3D210-P13A	M3D210 short-handle combination	M3Y210-P13A	M3Y210 crank combination
Applicable Products	M5C110、M5C210		M5D110、M5D210		M5Y110、M5Y210	
External dimensions	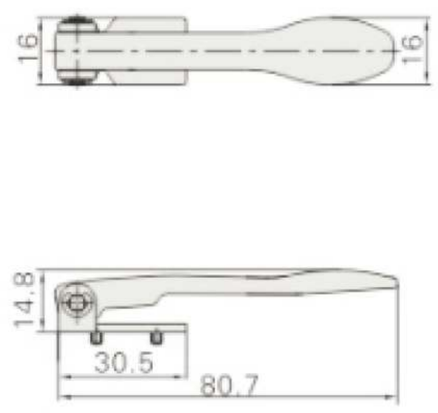		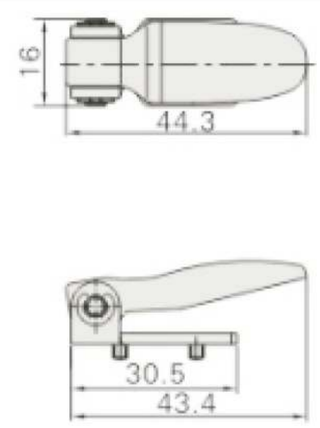		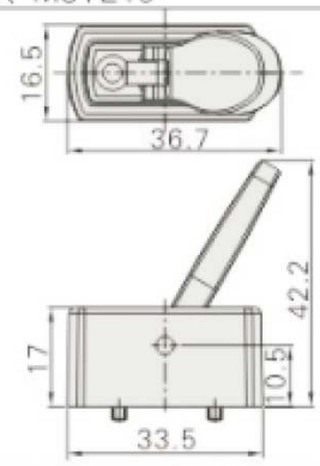	

Model	R roller lever type		L one-way roller lever type	
Order Method	Order Code	Specification	Order Code	Specification
	M3R210-P14A	M3R05 roller lever combination	M3L210-P14A	M3L05 one-way roller lever combination
Applicable Products	M5R110、M5R210		M5L110、M5L210	
External dimensions	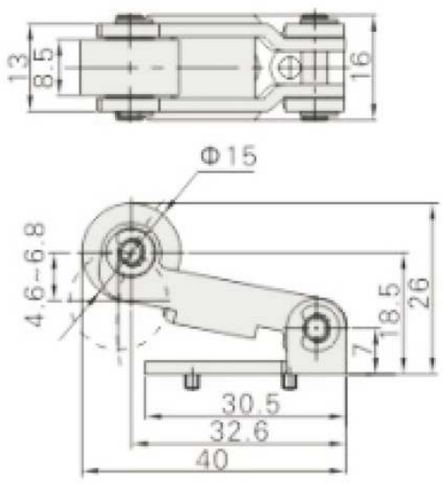		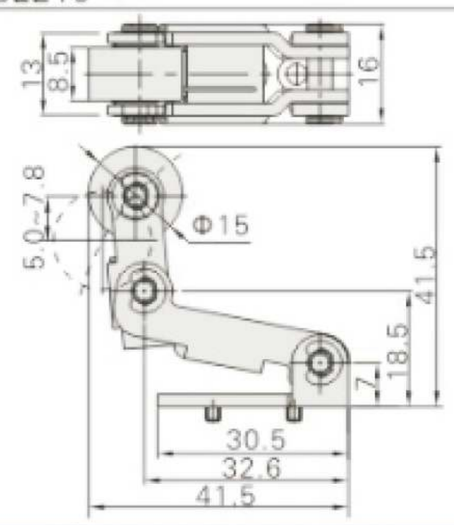	

Model	PP convex head button type		PM mushroom head button type		PL stop rotation button type	
Order Method	Order Code	Specification	Order Code	Specification	Order Code	Specification
	S3PP05-P11A	S3PP flush button combination (green)	S3PM05-P11A	S3PM button combination (green)	S3PL05-P12A	S3PL park rotation button combination (red)
	S3PP05-P12A	S3PP flush button combination(red)	S3PM05-P12A	S3PM button combination (red)		
	S3PP05-P13A	S3PP flush button combination (black)	S3PM05-P13A	S3PM button combination (black)		
Applicable Products	M5PP110、M5PP210		M5PM110、M5PM210		M5PL110、M5PL210	
External dimensions	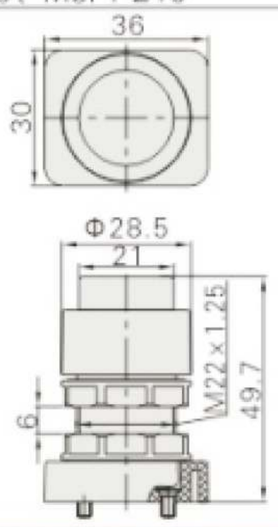		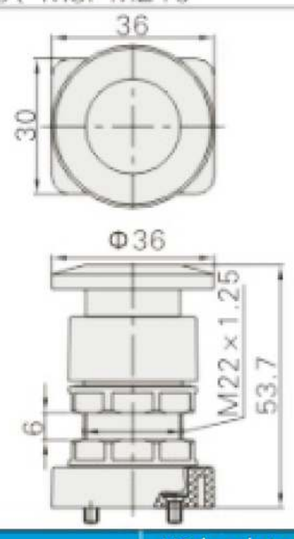		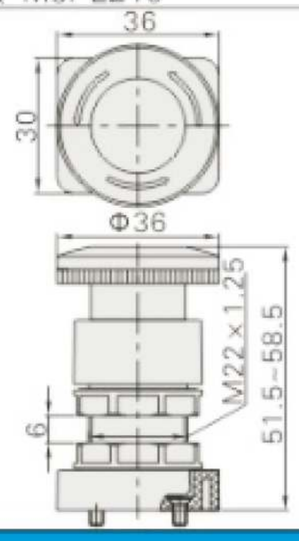	

Model	PF flush button type		HS knob type	
Order Method	Order Code	Specification	Order Code	Specification
	S3PF05-P11A	S3PF flush button combination (green)	S3HS05-P11A	S3HS knob combination (green)
	S3PF05-P12A	S3PF flush button combination (red)	S3HS05-P12A	S3HS knob combination(red)
	S3PF05-P13A	S3PF flush button combination (black)	S3HS05-P13A	S3HS knob combination(black)
Applicable Products	M5PF110、M5PF210		M5PF110、M5PF210	
External dimensions	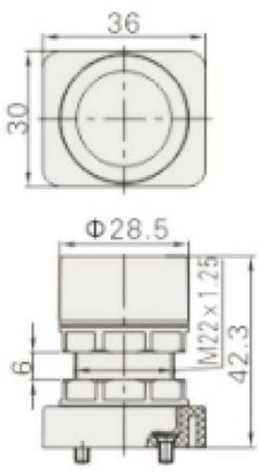		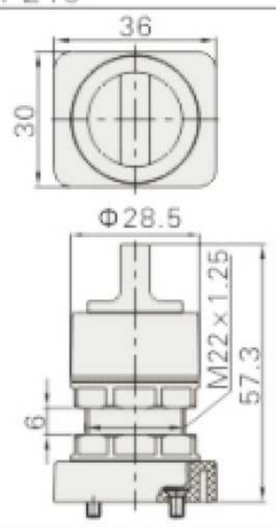	

Standard Specification

Model	CM3-05	CM3-06	CM3-08
Working medium	Air (filtered by a 40um or higher filter)		
Operation mode	External control direct-acting type		
Use pressure range	0-1.0MPa(0-10bar0-145psi)		
Guaranteed pressure resistance	1.5MPa(15bar215psi)		
Operating temperature	-20-70		
Position number	Three mouths and two bits		
Effective cross-sectional area	2.0mm²	2.5mm²	15.0mm²
Cv value	0.11	0.14	0.84
Pipe diameter	M5x0.8	G1/8	G1/4
Body material	Aluminum alloy		

1.HD type is five mouth three type.
2.G is available by tube tooth type.

Symbols

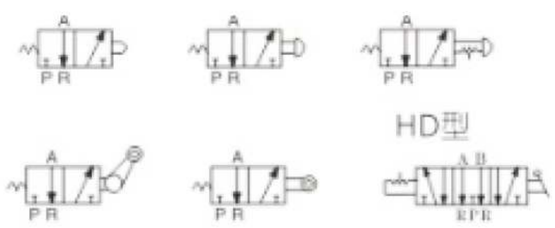

Product Features

1. CM3B, CM3L, SM3V, CM3R series require external force for commutation to be provided by external mechanism, which can be used for position detection or line and switch.
2.CM3PF, CM3PM, CM3PMS, CM3PX, CM3PL, CM3PP, CM3HS, CM3HD, CM3Y series are manually operated with multiple structure and shape control, convenient for use under different conditions.
3. Cut-off structure, good sealing, flexible reversing, no need to add lubrication.
4. Multi-position installation, easy to install and use.
5. CM3L, CM3V, CM3R, CM3Y series control head is made of metal, long life, more reliable and stable.
6. CM3PMS, CM3PMX series with metal shield, can effectively protect the button cap, and prevent the external force Atsu to the button cap to produce false action the use of more completely reliable.

Model number indication method

CM3 PP 06 B

Structure code
CM3:CM3 type mechanical valve
(Three port two-position or five port two-position)

Specification code
B:Basic mechanical valve
C:Long-handle type manual valve
D:Short-handle type manual valve
Y:Rocker type manual valve
R:Roller lever type mechanical valve
L:One-way roller lever type mechanical valve
PL:Stop and rotate push button type manual valve (only red available)
PP:Push button type manual valve with convex head
PF:Push button type manual valve with flat head
PM:Mushroom head push button type manual valve
PMS: Mushroom head push button type manual valve (with protective cover)
PMX:Large mushroom head push button type manual valve (with shield)
HS:Selector type manual network
HD:Double-action selector type manual valve

Button Color

B、R、L、Y、V	No such code
PL	R:Red
PP、PF、PM、PMS PMX、HS、HD	R:Red G:Green B:Black Y:Yellow

Catch pipe diameter
05:M5
06:G1/8
08:G114

Flow Characteristics

型号：CM3B-05

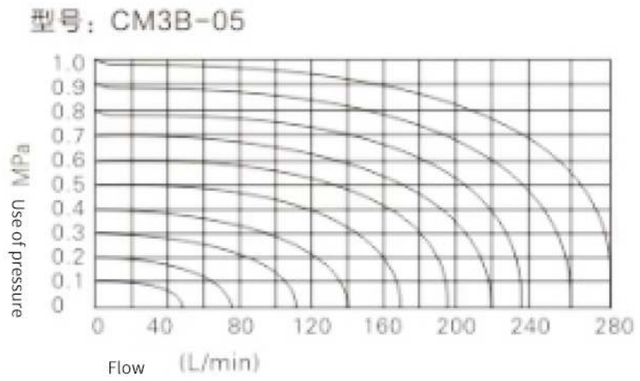

型号：CM3B-06

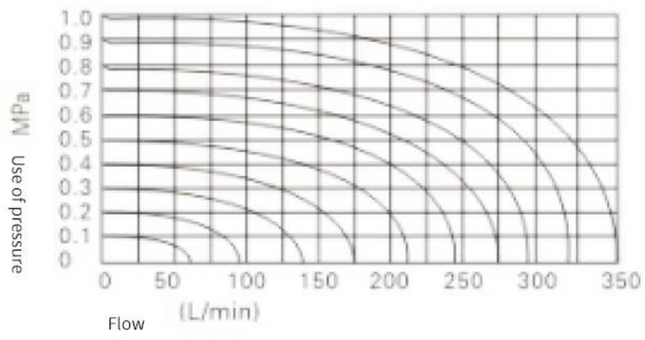

型号：CM3B-08

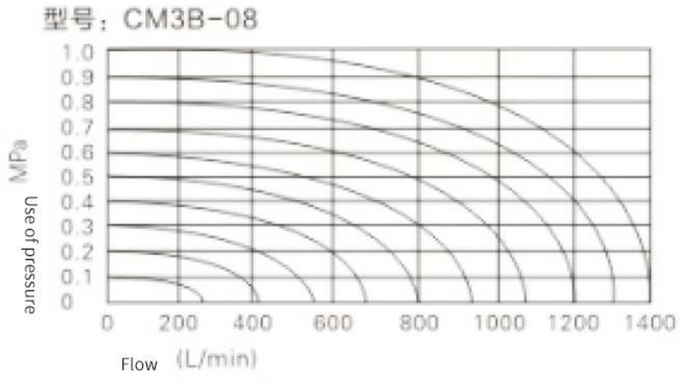

Internal structure

CM3V

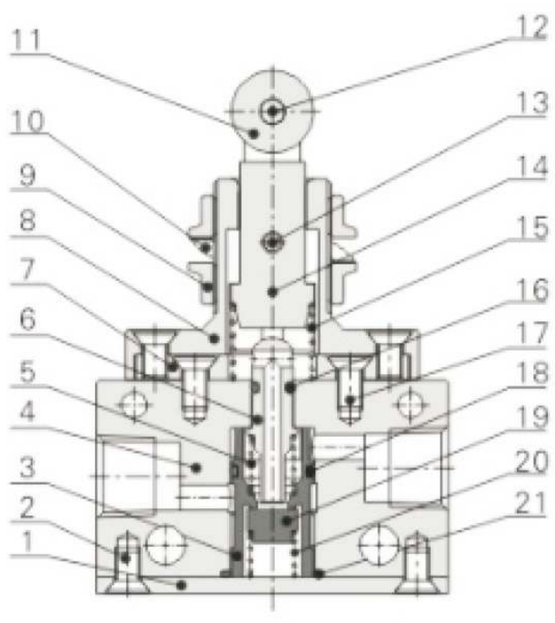

No.	Name	No.	Name
1	Fixed iron piece	12	Rotary Shaft
2	Crossed round head screws	13	Positioning pins
3	Bushing	14	Roller brackets
4	Body	15	Bullet paste
5	Spring	16	O-ring
6	Shaft	17	Cross countersunk head screws
7	Connection gasket	18	O-ring
8	Connection seat	19	Non-drain pad
9	Clamping nut	20	Spring
10	Spring tube gasket	21	O-ring
11	Rollers		

Installation and Use

1 installation methods are: body fixing method, panel fixing method 1, panel fixing method 2, stop button installation method, mushroom button installation method, as shown in the figure below.

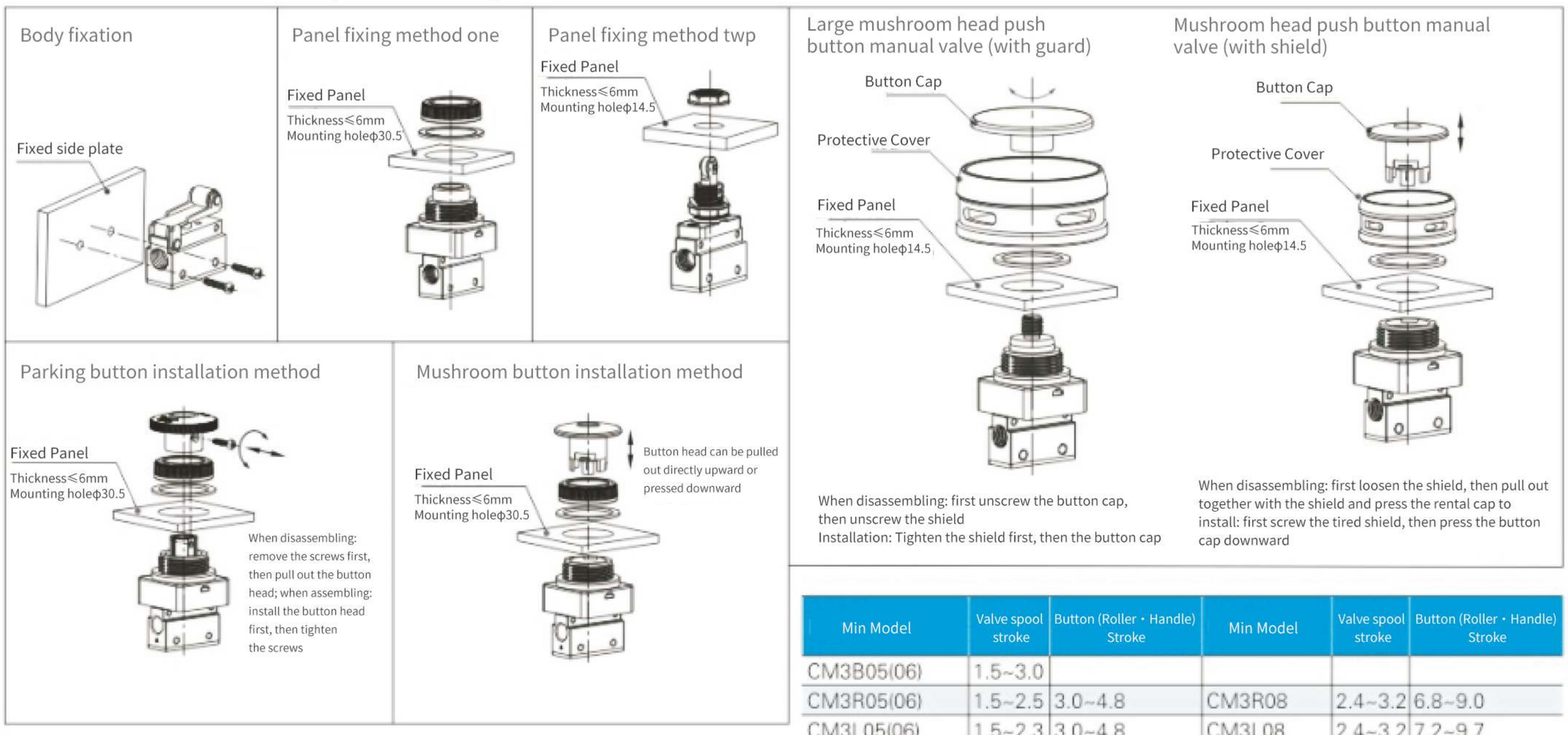

1.)The material of the control part is engineering plastic, which is only allowed to be operated by hand. It is forbidden to switch the valve by hitting it with metal.
2) CM3B, CM3L, CM3V, CM3R, CM3PM, CM3PMS, CM3PMX, CM3PF, CM3PP series are automatic reset, CM3Y, CM3HS, CM3HD, CM3PL are manual reset. Among them, CM3PL must be reset by rotating the rotary knob after being inserted and positioned.
3) Note that the reversing stroke, any external force to turn the valve, the reversing stroke can not exceed the control line and the table specified in the reversing stroke range, otherwise it will cause the opening is not enough flow is smaller or the valve body is damaged.
4)CM3L one-way roller valve only a single direction can make the valve switch (from left to right impact). The other direction
5) invalid impact (from right to left).
6) Control head combinations can be ordered separately, refer to external specifications for specific ordering methods.

Min Model	Valve spool stroke	Button (Roller · Handle) Stroke	Min Model	Valve spool stroke	Button (Roller · Handle) Stroke
CM3B05(06)	1.5~3.0				
CM3R05(06)	1.5~2.5	3.0~4.8	CM3R08	2.4~3.2	6.8~9.0
CM3L05(06)	1.5~2.3	3.0~4.8	CM3L08	2.4~3.2	7.2~9.7
CM3V05(06)	1.5~3.0	2.7~4.2	CM3V08	2.4~4.0	2.6~4.2
CM3Y05(06)	1.5~2.5	3.0~4.8	CM3Y08	2.4~3.2	6.8~9.0
CM3PL05(06)	1.5~2.5	4.0~5.0	CM3PL08	2.4~3.5	4.0~5.0
CM3PP05(06)	1.5~3.0	4.0~5.5	CM3PP08	2.4~4.0	4.0~5.5
CM3PF05(06)	1.5~3.0	4.0~5.5	CM3PF08	2.4~4.0	4.0~5.5
CM3HS05(06)	1.5~3.0	4.0~5.5	CM3HS08	2.4~4.0	4.0~5.5
CM3HD05(06)	1.5~3.0	4.0~5.5	CM3HD08	2.4~4.0	4.0~5.5
CM3PM05(06)	1.5~3.0	4.0~5.5	CM3PM08	2.4~4.0	4.0~5.5
CM3PMS05(06)	1.5~3.0	4.0~5.5	CM3PMX08	2.4~4.0	4.0~5.5
CM3PMX05(06)	1.5~3.0	4.0~5.5	CM3PMX08	2.4~4.0	4.0~5.5

External specifications (basic type)

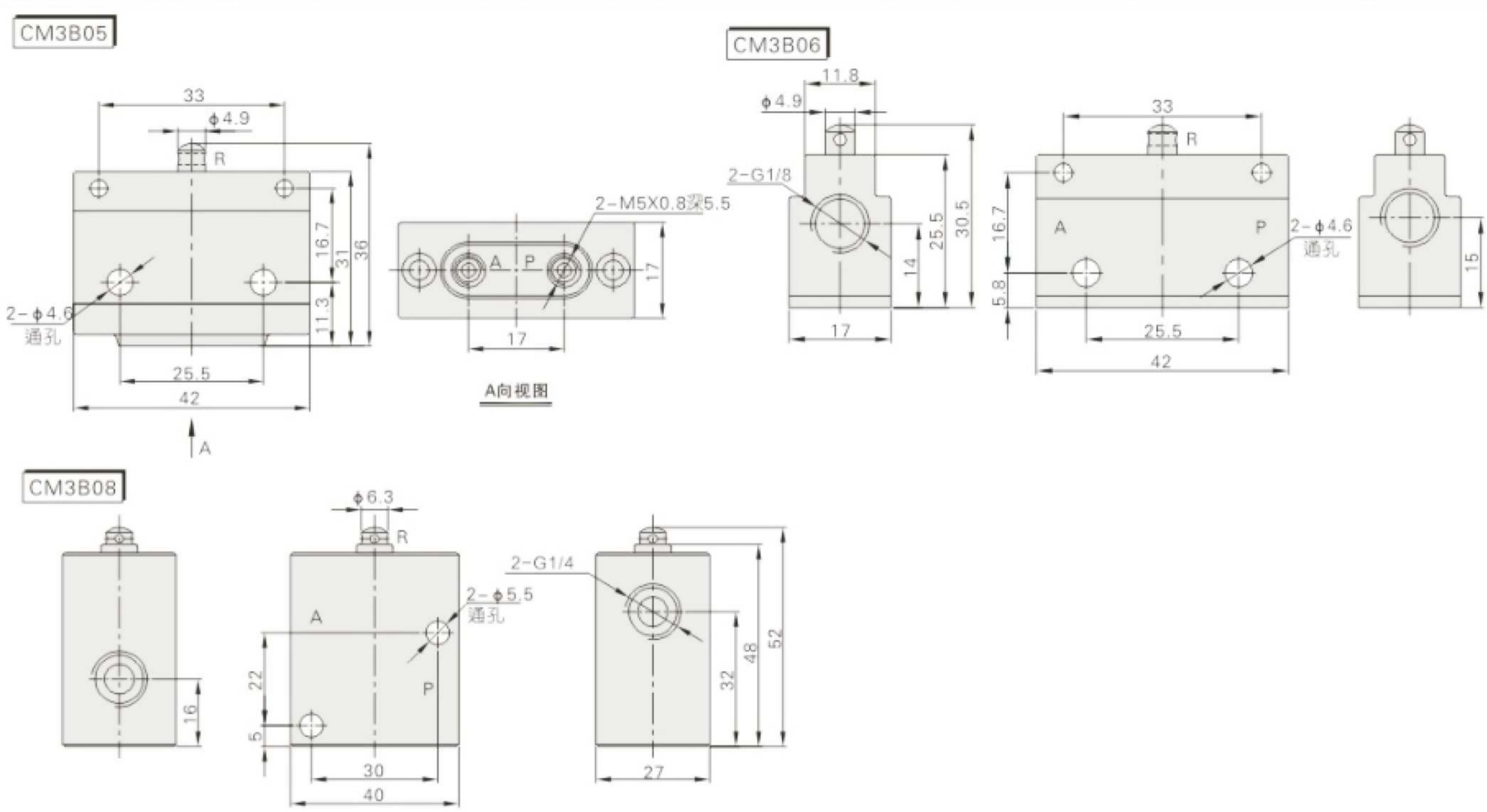

External specifications (control head)

CM3R06-P1

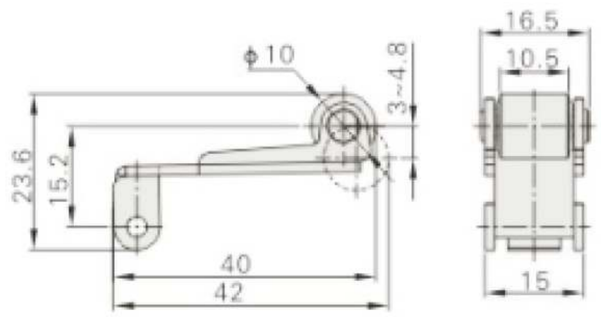

Note:CM3R06 control head can not be ordered separately, it must be used with the basic type for CM3R05 and CM3R06 type products.

CM3L06-P1

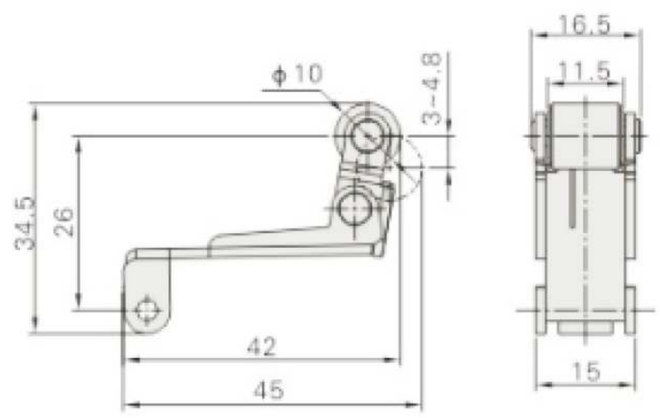

Note:CM3L06 control head can not be ordered separately, it must be used with basic type for CM3L05 and CM3L06 type products.

CM3R08-P1

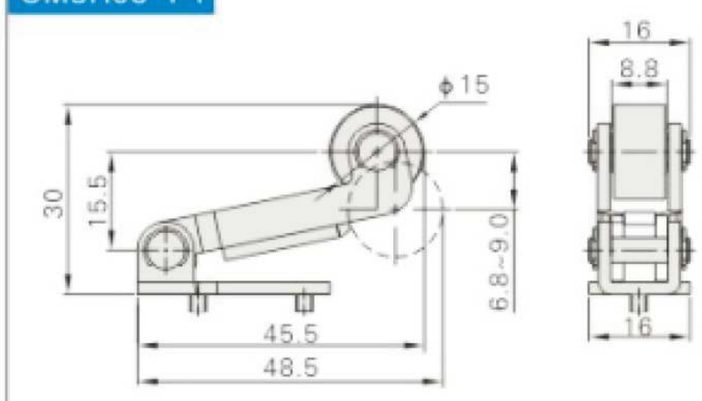

Order Code	CM3R08-P1
Specification Name	CM3R08 Ro1ler Bar Set
Applicable products	CH3R08

CM3L08-P1

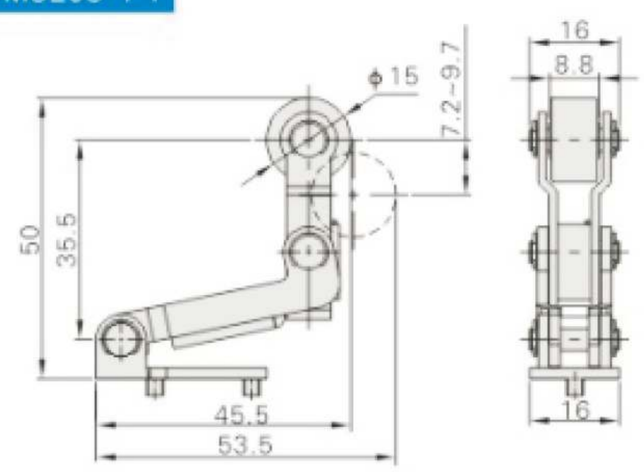

Order Code	CH3L08-P1
Specification Name	CH3L08 Roller Bar Set
Applicable products	CI3L08

CM3V06-P1

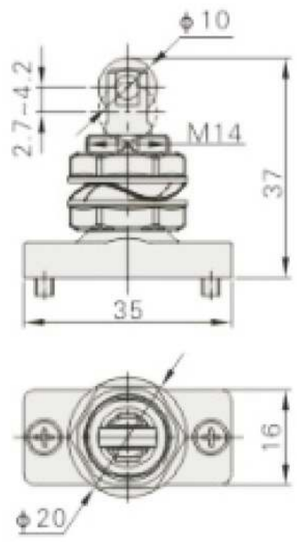

Order Code	CM3V06-P1
Specification Name	CM3V Vertical Roller Combination
Applicable products	CH3V05、CM3V06、CM3V08

CM3Y06-P1

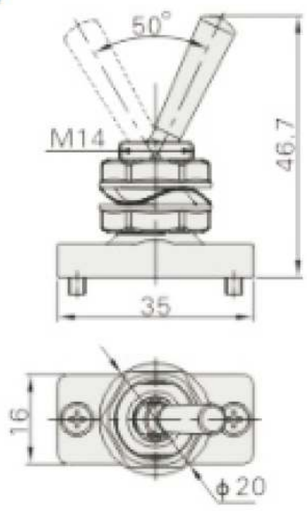

Order Code	CM3Y06-P1
Specification Name	CM3Y rocker combination
Applicable products	CH3Y05、CM3Y06、CH3Y08

CM3PL06-P2

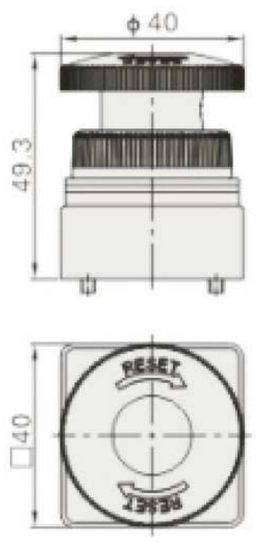

Order Code	CM3PL06-P2
Specification Name	CM3PL Dock Rotation Button Combination (Red)
Applicable products	CM3PL05、CH3PL06、CH3PL08

CM3PP06-P□

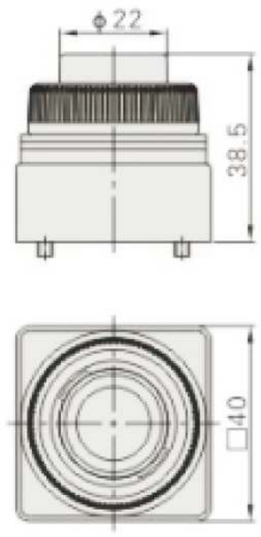

Order Code	CM3HD06-P1
Specification Name	CM3HD Dual Action Selector Knob Combination (Green)
Applicable products	CM3HD05、CM3HD06、CM3HD08
Order Code	CM3HD06-P2
Specification Name	CM3HD Dual Action Selector Knob Combination (Red)
Applicable products	CM3HD05、CM3HD06、CM3HD08
Order Code	CM3HD06-P3
Specification Name	CM3HD Dual Action Selector Knob Combination (Black)
Applicable products	CM3HD05、CM3HD06、CM3HD08
Order Code	CM3HD06-P4
Specification Name	CM3HD Dual Action Selector Knob Combination (Yellow)
Applicable products	CM3HD05、CM3HD06、CM3HD08

CM3PF06-P□

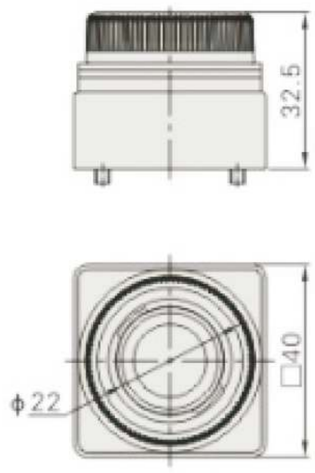

Order Code	CM3HD06-P1
Specification Name	CM3HD Dual Action Selector Knob Combination (Green)
Applicable products	CM3HD05、CM3HD06、CM3HD08
Order Code	CM3HD06-P2
Specification Name	CM3HD Dual Action Selector Knob Combination (Red)
Applicable products	CM3HD05、CM3HD06、CM3HD08
Order Code	CM3HD06-P3
Specification Name	CM3HD Dual Action Selector Knob Combination (Black)
Applicable products	CM3HD05、CM3HD06、CM3HD08
Order Code	CM3HD06-P4
Specification Name	CM3HD Dual Action Selector Knob Combination (Yellow)
Applicable products	CM3HD05、CM3HD06、CM3HD08

CM3PM06-P□

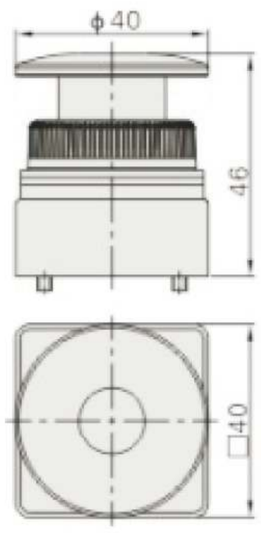

Order Code	CM3PM06-P1
Specification Name	CM3PM Mushroom Head Button Set (Green)
Applicable products	CM3PM05、CM3PM06、CM3PM08
Order Code	CM3PM06-P2
Specification Name	CM3PM Mushroom Head Button Set (Red)
Applicable products	CM3PM05、CM3PM06、CM3PM08
Order Code	CM3PM06-P3
Specification Name	CM3PM Mushroom Head Button Set (Black)
Applicable products	CM3PM05、CM3PM06、CM3PM08
Order Code	CM3PM06-P4
Specification Name	CM3PM Mushroom Head Button Set (Yellow)
Applicable products	CM3PM05、CM3PM06、CM3PM08

CM3HS06-P□

Order Code	CM3HS06-P1
Specification Name	CM3HS rotating combination (green)
Applicable products	CM3HS05、CM3HS06、CM3HS08
Order Code	CM3PM06-P2
Specification Name	CM3HS rotating combination (Red)
Applicable products	CM3HS05、CM3HS06、CM3HS08
Order Code	CM3PM06-P3
Specification Name	CM3HS rotating combination (Black)
Applicable products	CM3HS05、CM3HS06、CM3HS08
Order Code	CM3PM06-P4
Specification Name	CM3HS rotating combination (Yellow)
Applicable products	CM3HS05、CM3HS06、CM3HS08

CM3PMS06-P□

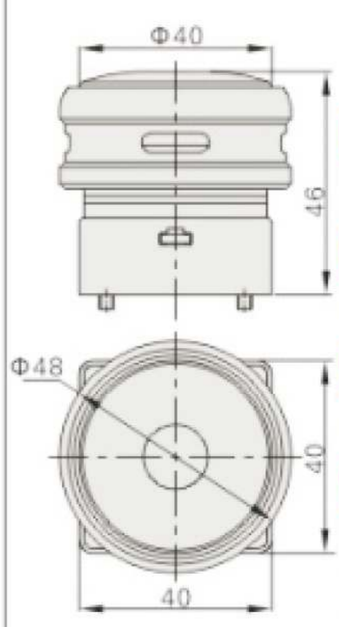

Order Code	CM3PMS06-P1
Specification Name	CM3PMS Mushroom head button combination (green/with guard)
Applicable products	CM3PMS05、CM3PMS06、CM3PMS08
Order Code	CM3PMS06-P2
Specification Name	CM3PMS Mushroom head button combination (red/with guard)
Applicable products	CM3PMS05、CM3PMS06、CM3PMS08
Order Code	CM3PMS06-P3
Specification Name	CM3PMS Mushroom head button combination (black/with guard)
Applicable products	CM3PMS05、CM3PMS06、CM3PMS08
Order Code	CM3PMS06-P4
Specification Name	CM3PMS Mushroom head button combination (yellow/with guard)
Applicable products	CM3PMS05、CM3PMS06、CM3PMS08

CM3PMX06-P□

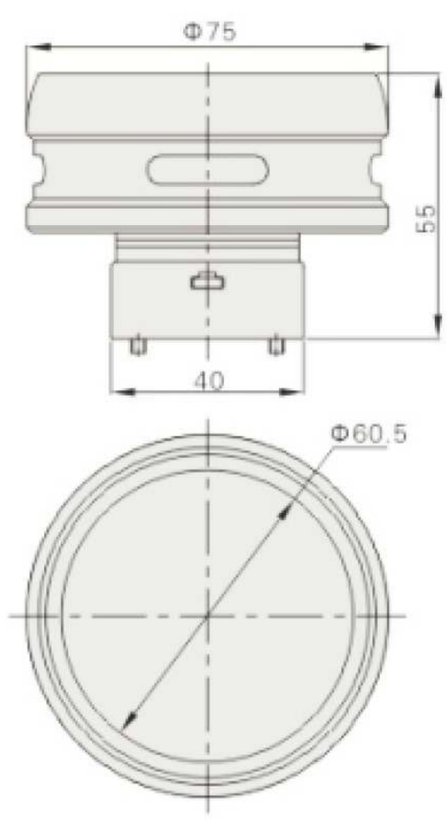

Order Code	CM3PMX06-P1
Specification Name	CM3PMX Mushroom head button combination (green/with guard)
Applicable products	CM3PMX05、CM3PMX06、CM3PMX08
Order Code	CM3PMX06-P2
Specification Name	CM3PMX Mushroom head button combination (red/with guard)
Applicable products	CM3PMX05、CM3PMX06、CM3PMX08
Order Code	CM3PMX06-P3
Specification Name	CM3PMX Mushroom head button combination (black/with guard)
Applicable products	CM3PMX05、CM3PMX06、CM3PMX08
Order Code	CM3PMX06-P4
Specification Name	CM3PMX Mushroom head button combination (yellow/with guard)
Applicable products	CM3PMX05、CM3PMX06、CM3PMX08

CM3HD06-P□

CM3HD05

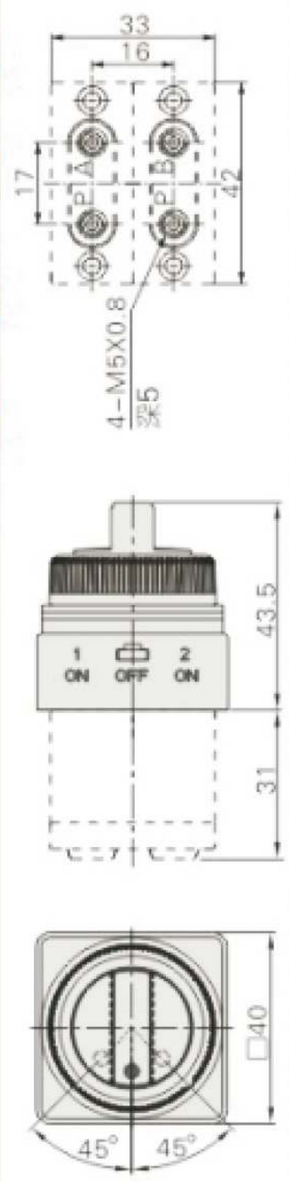

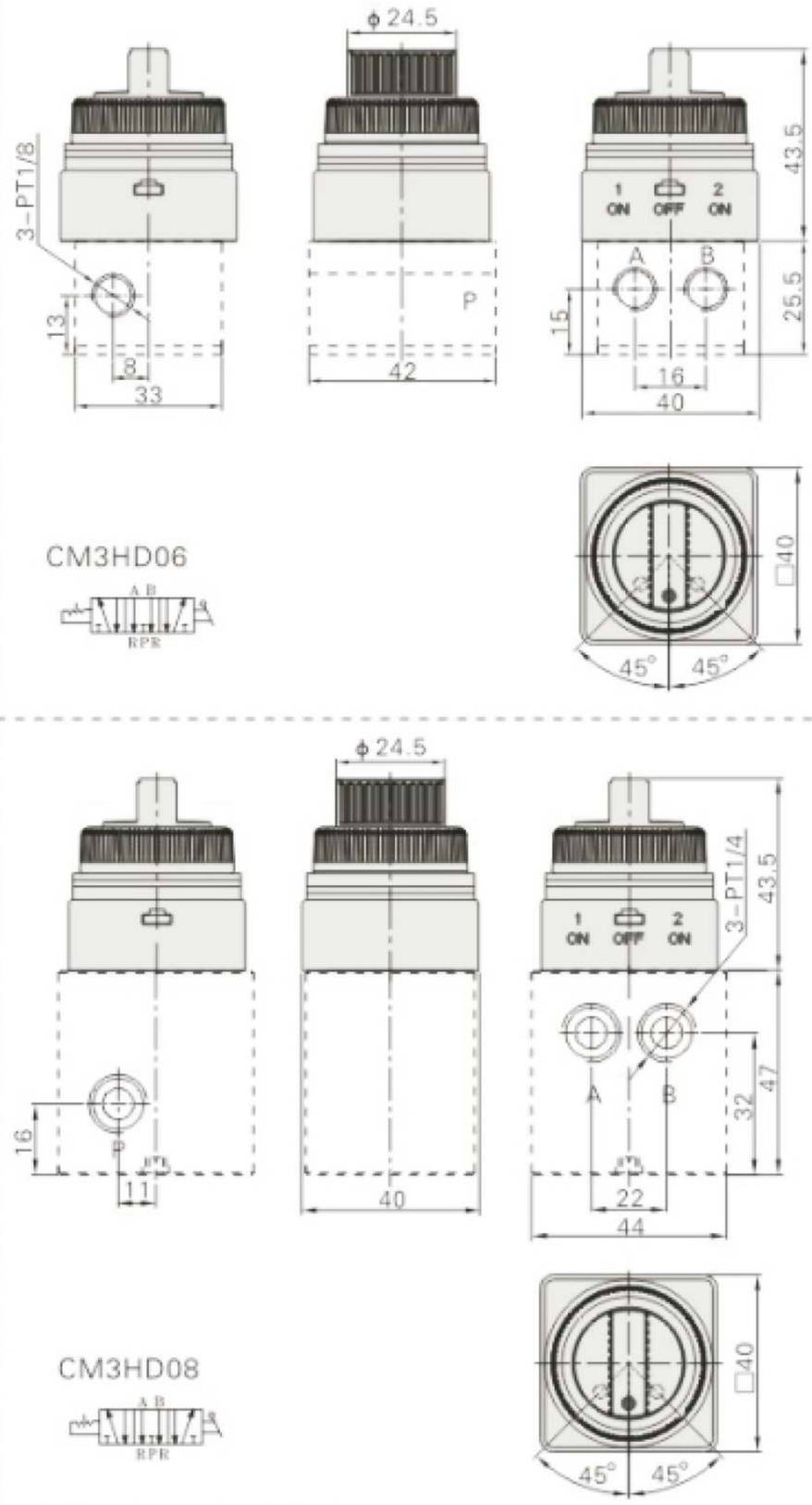

Order Code	CM3HD06-P1
Specification Name	CM3HD Dual Action Selector Knob Combination (Green)
Applicable products	CM3HD05、CM3HD06、CM3HD08
Order Code	CM3HD06-P2
Specification Name	CM3HD Dual Action Selector Knob Combination (Red)
Applicable products	CM3HD05、CM3HD06、CM3HD08
Order Code	CM3HD06-P3
Specification Name	CM3HD Dual Action Selector Knob Combination (Black)
Applicable products	CM3HD05、CM3HD06、CM3HD08
Order Code	CM3HD06-P4
Specification Name	CM3HD Dual Action Selector Knob Combination (Yellow)
Applicable products	CM3HD05、CM3HD06、CM3HD08

Note:CM3HD control head can be ordered separately, must be used with CM3HD body

Standard Specification

Model	ZM3R	ZM3J	ZM3P
Working medium	Air (filtered by a 40um or higher filter)		
Operation mode	External control direct-acting type		
Use pressure range	0-1.0MPa(0-10bar0-145psi)		
Guaranteed pressure resistance	1.5MPa(15bar215psi)		
Operating temperature	-20-70		
Position number	Three mouths and two bits		
Effective cross-sectional area	2.0mm²	2.5mm²	15.0mm²
Cv value	0.11	0.14	0.84
Pipe diameter	M5x0.8	G1/8	G1/4
Body material	Aluminum alloy		

1. According to the tube tooth type there are PT, G can choose.
2.If there is oil lubrication, midway can not stop, the recommended lubricant is ISOVG32 or the same level with Shan.

Symbols

Model number indication method

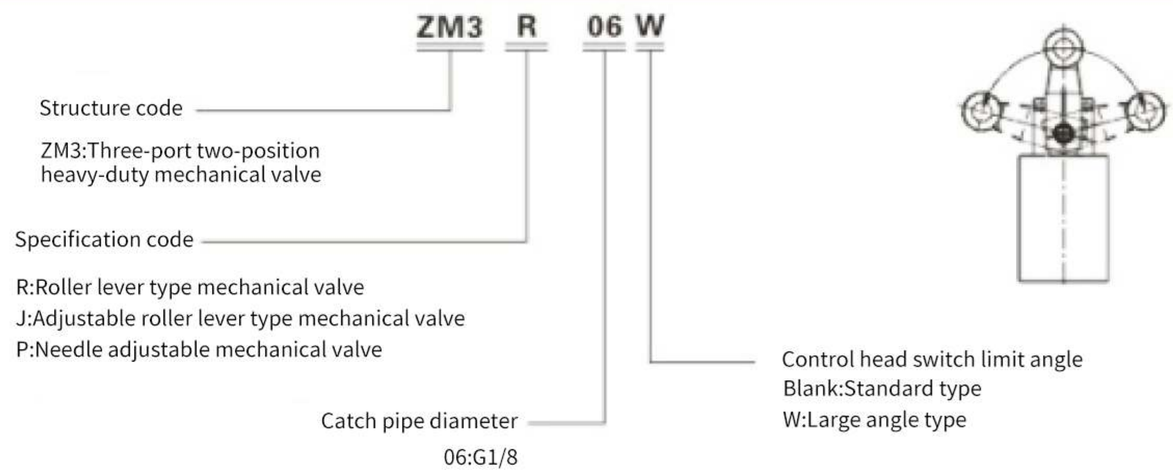

Product Features

1. The direction of action can be changed
(only for the standard type, large angle type without this)

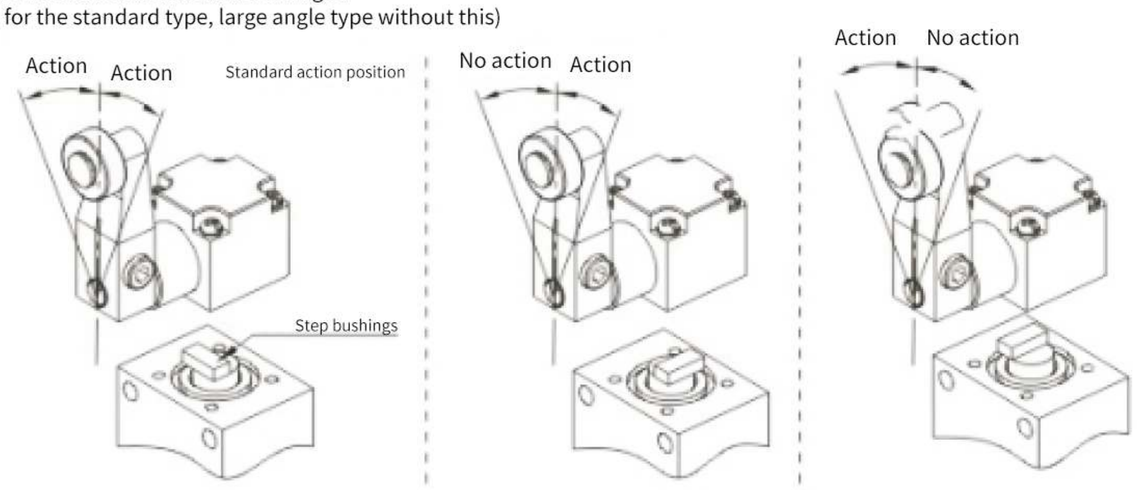

2. The roller can be mounted on the inside of the lever

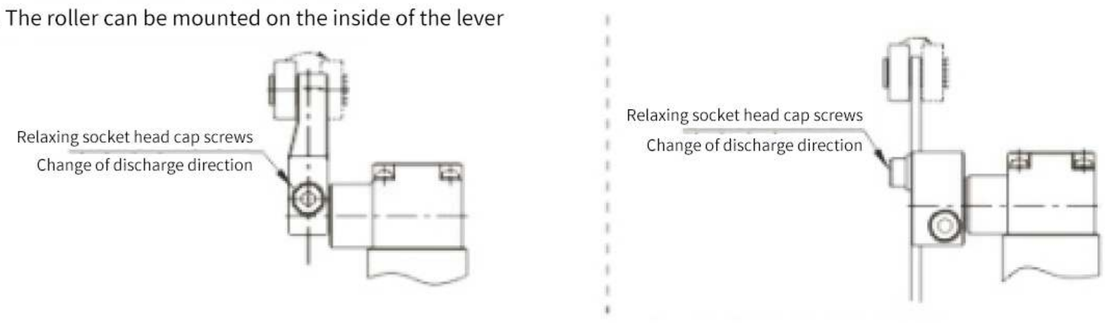

3、The installation position of the lever can be changed

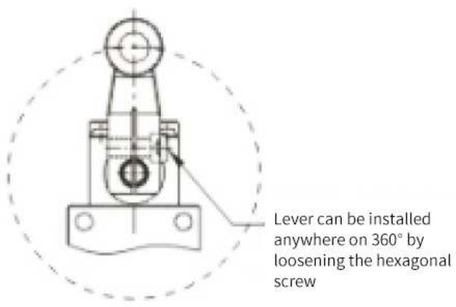

4、The direction of the head can be changed

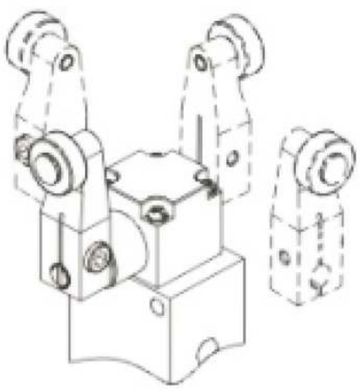

5、The length of the stylus can be adjusted

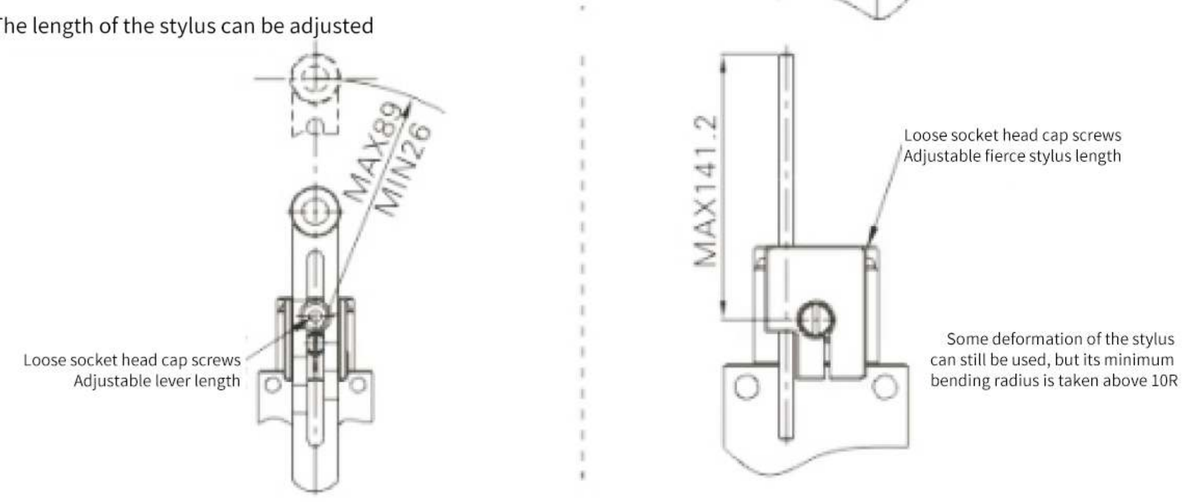

Flow Characteristics

Internal structure

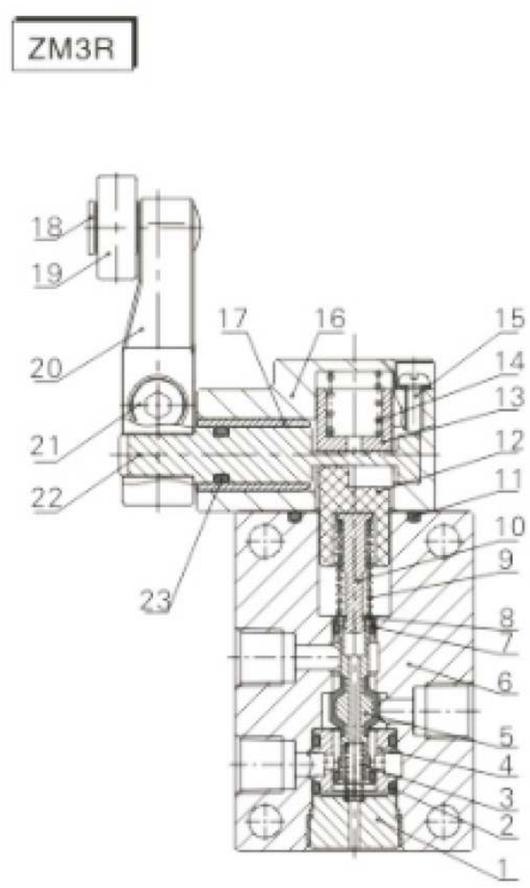

N0.	Name
1	Bottom Cover
2	O-ring
3	Spring
4	Spacer
5	Shaft core
6	Body
7	O-ring
8	Spring spacer
9	Spring
10	Top rod
11	O-ring
12	Bushing
13	Spring Seat
14	Spring
15	Phillips head screws
16	Top cover
17	Sliding Bushing
18	Spindle
19	Rollers
20	Rocker arm
21	Hexagon socket screws
22	Swivel shafts
23	O-ring

External specifications (basic type)

ZM3R

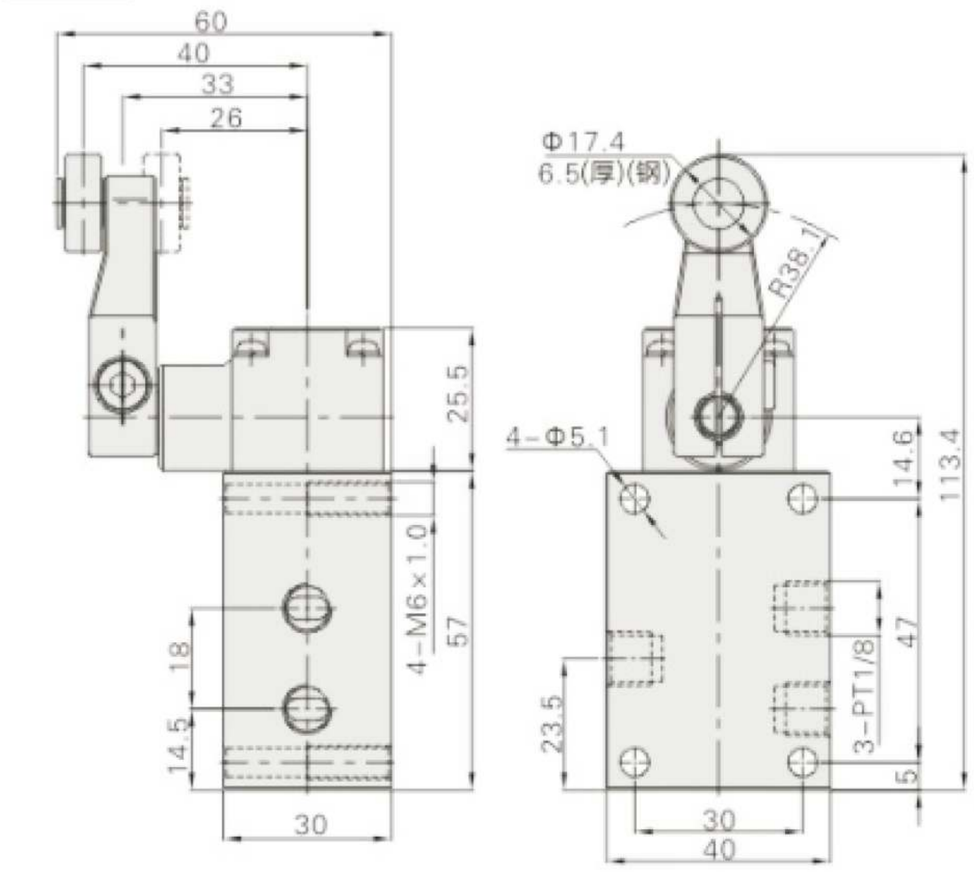

Item Model	ZM3R06	ZM3R06-W
F.O.F	20N	20N
P.T.	20°	25°
O.T.	30°	50°
T.T.	50°	75°

ZM3J

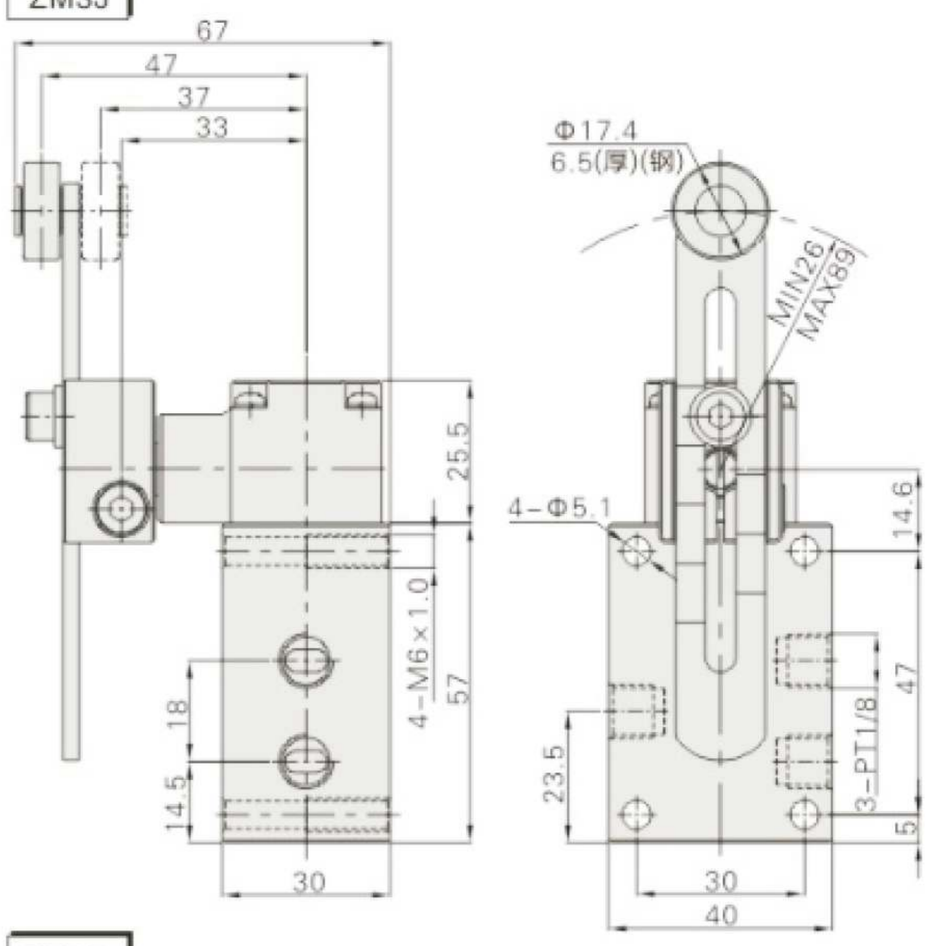

Item Model	ZM3J06	ZM3J06-W
F.O.F.①	20N	20N
P.T.	20°	25°
O.T.	30°	50°
T.T.	50°	75°

1 Lever and the value when the cane is 38.1mm.

ZM3P

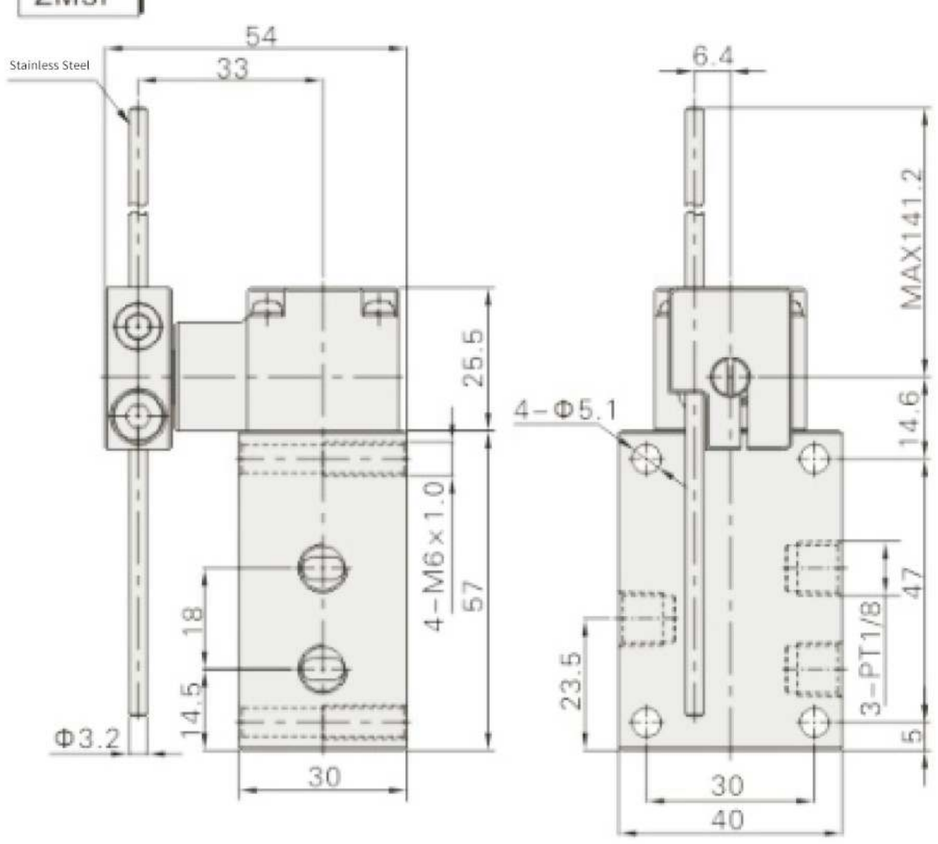

Item Model	ZM3P06	ZM3P06-W
F.O.F.①	2.3N	2.3N
P.T.	20°	25°
O.T.	30°	50°
T.T.	50°	75°

①杠杆和蕾为141.2mm时之值。
1 Lever and the value when the cane is 141.2 mm.

Symbol Description

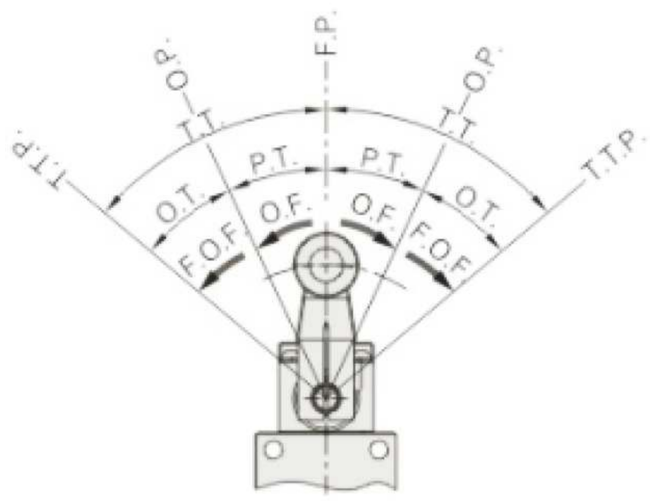

F P / O P — Free position: The position of the control head when no external force is applied: Action position: External force is applied to the control head and the valve is switched.

T.T.P — Action limit position: The position when the control head is pushed and pressed to the point of no action.

O.F — Operating force: The operating force applied to the control head to drive from the free position to the operating position.

F.O.F — Ultimate action force: The operating force applied to the control head from the free position drive to the action limit position.

P.T — Free travel: The distance or rotation angle from the free position of the control head to the action position.

O.T — Action travel: The distance or rotation angle from the action position of the control head to the action limit position

T.T — Total travel: The distance or rotation angle of travel from the control head's self-shan position to the action limit position.

Standard Specification

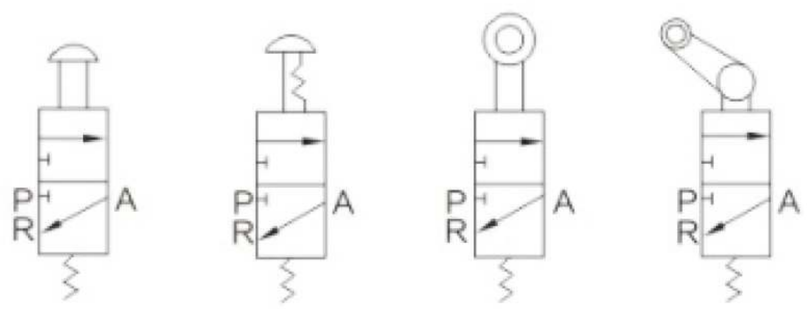

Model number indication method

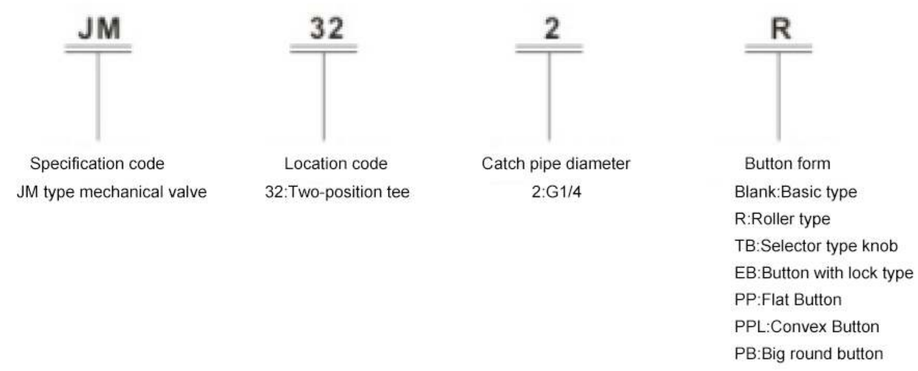

Specification

Item/Model	JM322	JM322RJM-07	JM322PP	JM322PPL	JM322PBJM-06A	JM322EBJM-06	JM322TBJM-05
Use of media	Air (filtered by a 40um or higher filter)						
Operation mode	Direct-acting type						
Pipe diameter	08:G1/4						
Use pressure	0~0.8Mpa(0-114Psi)						
Operating temperature	-5-60℃(28-140°F)						
Lubrication	Not required						

External dimensions (mm)

JM322

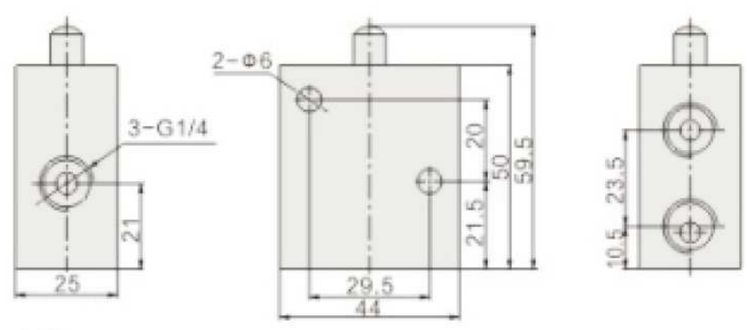

JM322R

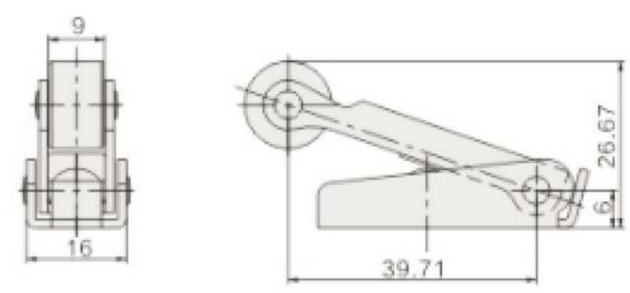

JM322PP

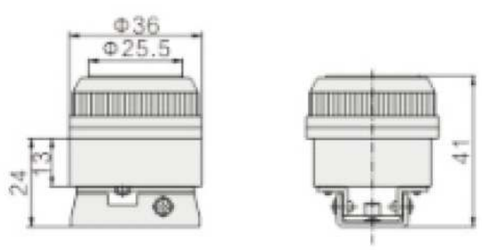

JM322PPL

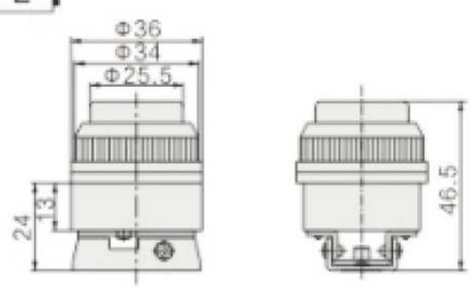

JM322TB

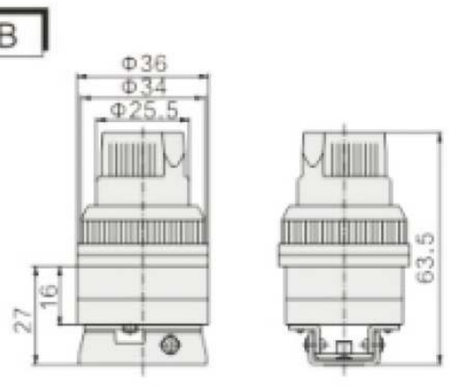

JM322PB

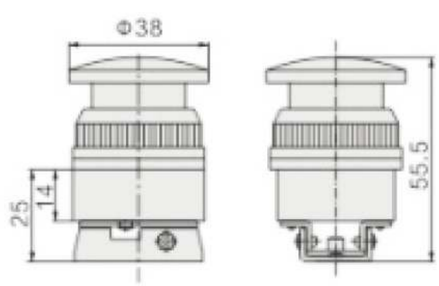

JM322EB

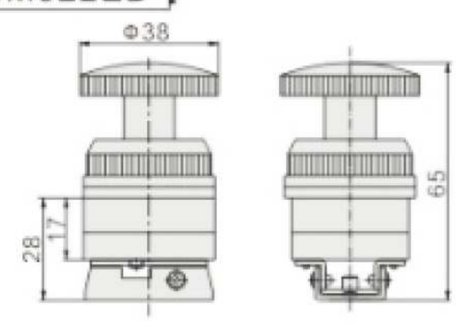

Standard Specification

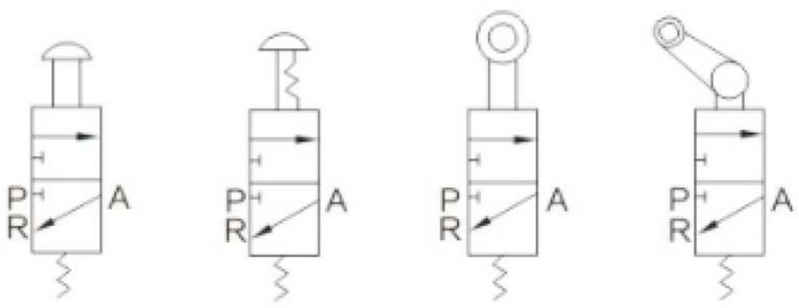

Model number indication method

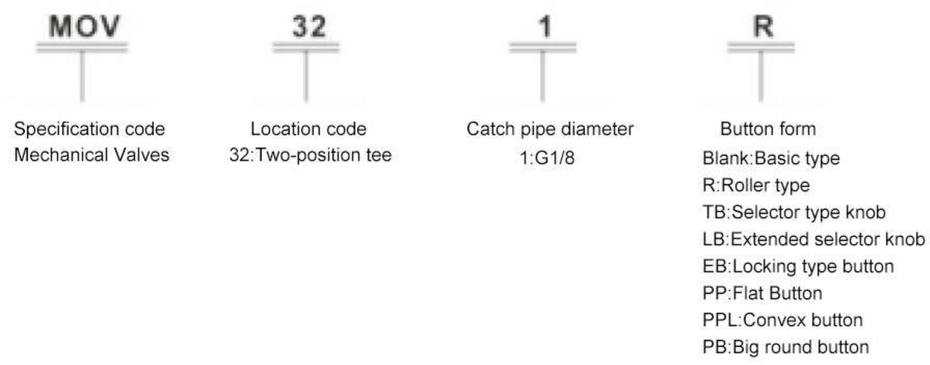

Specification

Item/Model	MV522	MV522RMV-09	MV522PP	MV522PPLMV-10A	MV522PBMV-10-1	MV522EBMV-10	MV522TBMV-08
Use of media	Air (filtered by a 40um or higher filter)						
Operation mode	Direct-acting type						
Pipe diameter	08:G1/4						
Use pressure	0~0.8Mpa(0-114Psi)						
Operating temperature	-5-60°C(28-140°F)						
Lubrication	Not required						

External dimensions (mm)

MOV321

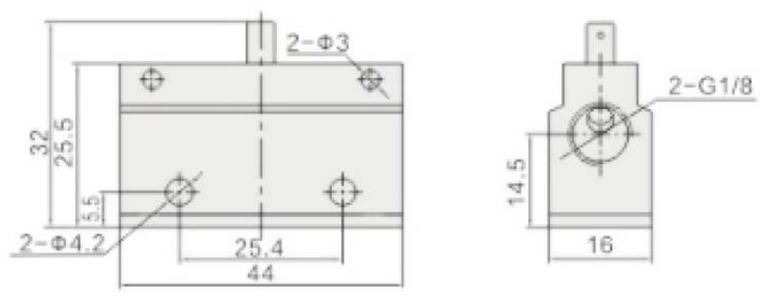

MOV321R

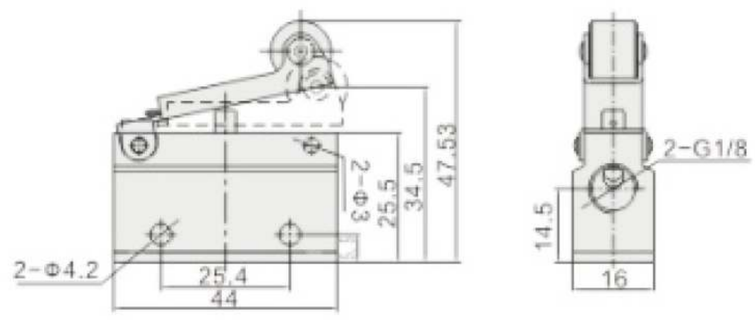

MOV321PP

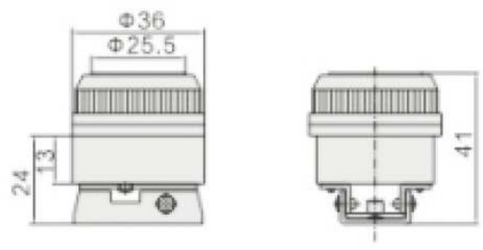

MOV321PPL

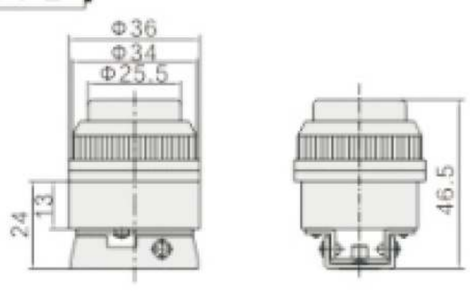

MOV321TB

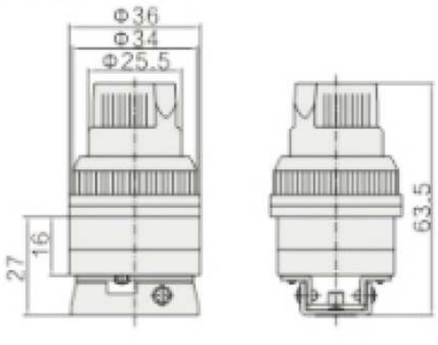

MOV321PB

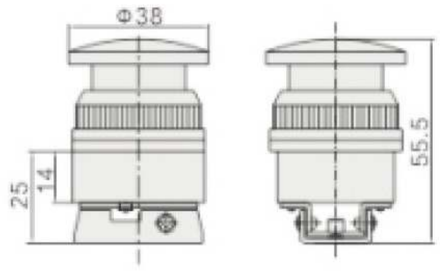

MOV321EB

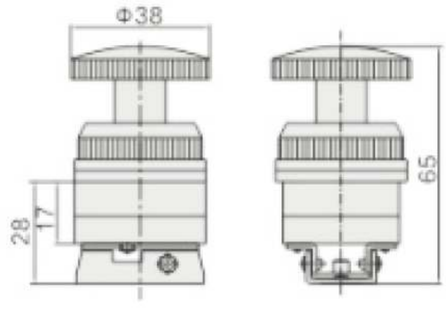

Standard Specification

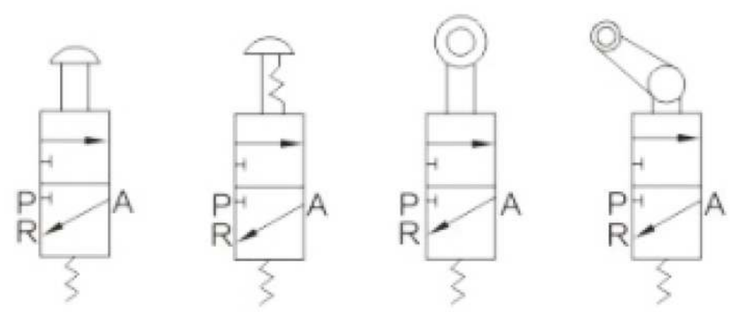

Model number indication method

MV	32	2	R
Specification code	Location code	Catch pipe diameter	Button form
MV type mechanical valve	32:Two-position tee	2:G1/4	Blank:Basic type R:Roller type TB:Selector type knob EB:Button with lock type PP:Flat Button PPL:Convex Button PB:Big round button

Specification

Item/Model	MV522	MV522RMV-09	MV522PP	MV522PPLMV-10A	MV322PBMV-32-10-1	MN322EBMV-32-10	MV322TBMV-32-08
Use of media	Air (filtered by a 40um or higher filter)						
Operation mode	Direct-acting type						
Pipe diameter	08:G1/4						
Use pressure	0~0.8Mpa(0-114Psi)						
Operating temperature	-5-60℃(28-140°F)						
Lubrication	Not required						

External dimensions (mm)

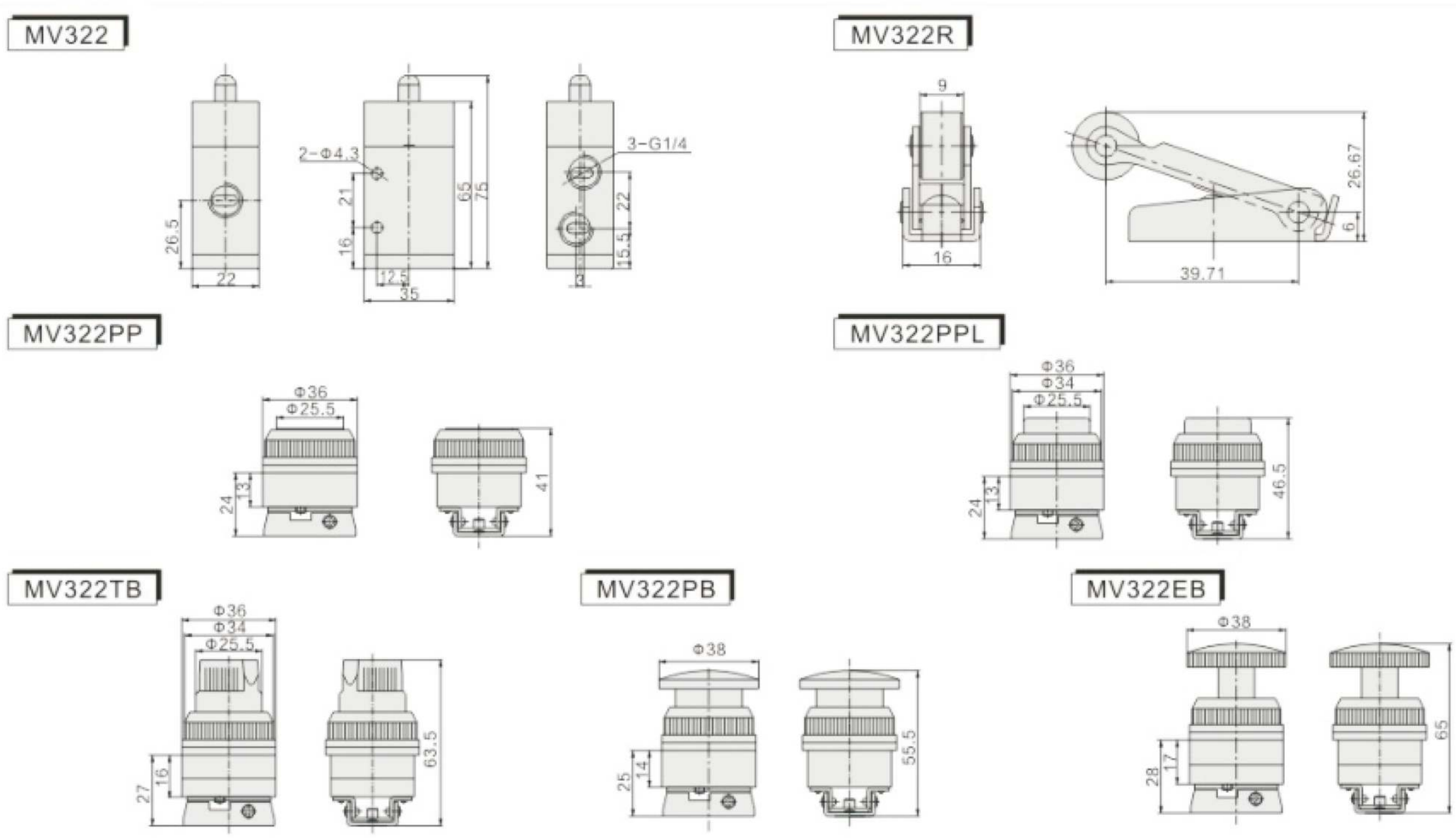

Standard Specification

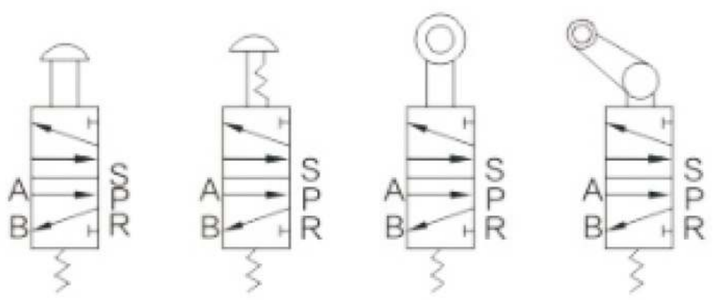

Model number indication method

MV	52	2	R
Specification code MV type mechanical valve	Location code 52:Two-bit five-way	Catch pipe diameter 2:G1/4	Button form Blank:Basic type R:Roller type TB:Selector type knob EB:Button with lock type PP:Flat Button PPL:Convex Button PB:Big round button

Specification

Item/Model	MV522	MV522RMV-09	MV522PP	MV522PPLMV-10A	MV322PBMV-32-10-1	MN322EBMV-32-10	MV322TBMV-32-08
Use of media	Air (filtered by a 40um or higher filter)						
Operation mode	Direct-acting type						
Pipe diameter	08:G1/4						
Use pressure	0~0.8Mpa(0-114Psi)						
Operating temperature	-5-60°C(28-140°F)						
Lubrication	Not required						

External dimensions (mm)

MV522

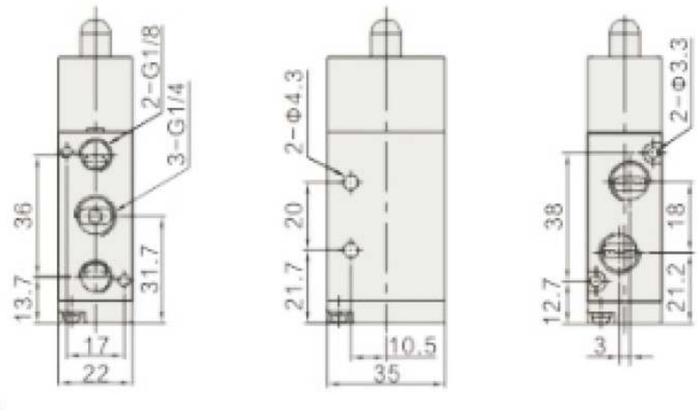

MV522R

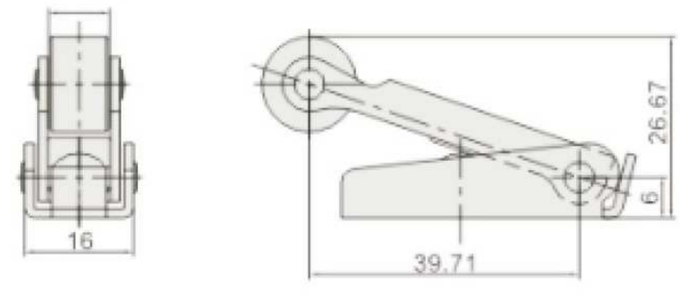

MV522PP

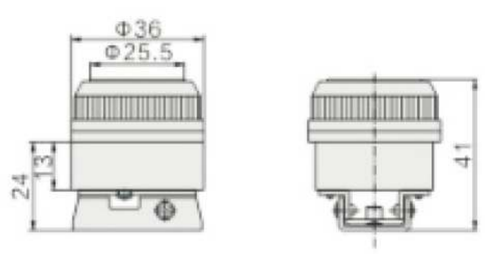

MV522PPL

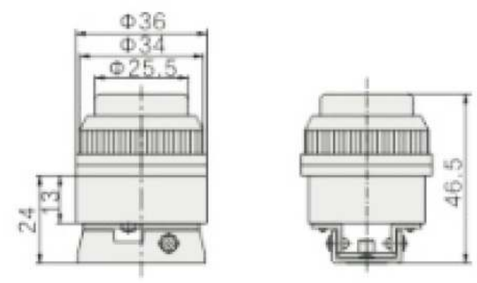

MV522TB

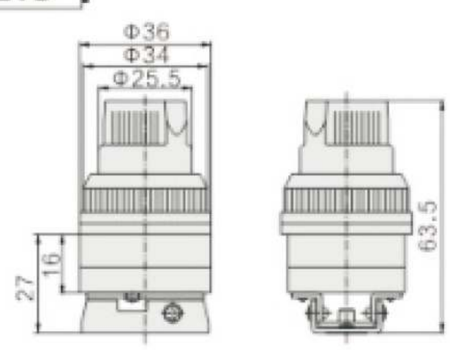

MV522PB

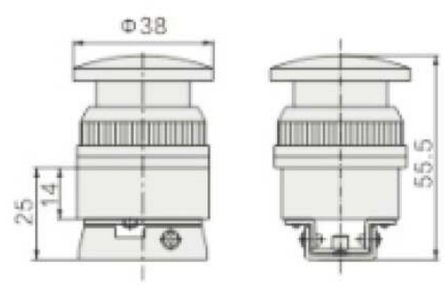

MV522EB

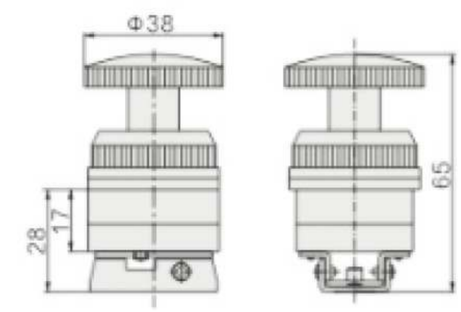

Standard Specification

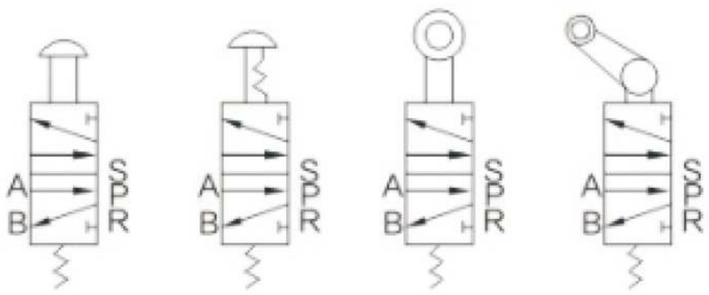

Model number indication method

JMJ	52	2	R
Specification code	Location code	Catch pipe diameter	Button form
JM type mechanical valve	52:Two-bit five-way	2:G1/4	Blank:Basic type R:Roller type TB:Selector type knob EB:Button with lock type PP:Flat Button PPL:Convex Button PB:Big round button

Specification

Item/Model	JMJ522	JMJ522RJMJ-07	JMJ522PPJMJ-05	JMJ522PPLJMJ-06	JMJ522PBJMJ-04	JMJ522EBJMJ-03	JMJ522TBJMJ-01	JMJ522LBJMJ-02
Use of media	Air (filtered by a 40um or higher filter)							
Operation mode	Direct-acting type							
Pipe diameter	08:G1/4							
Use pressure	0~0.8Mpa(0-114Psi)							
Operating temperature	-5-60°C(28-140°F)							
Lubrication	Not required							

External dimensions (mm)

Basic

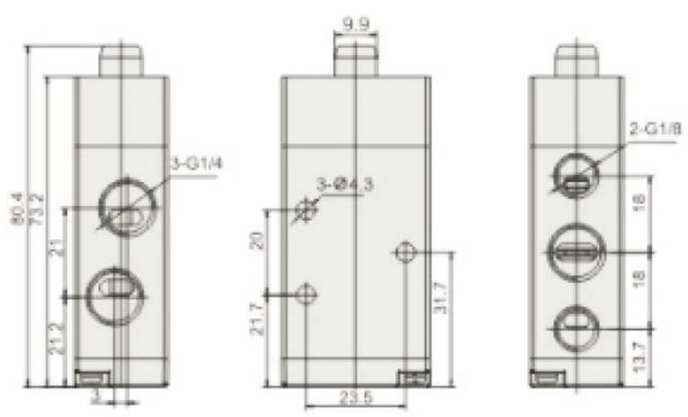

Push button with lock type

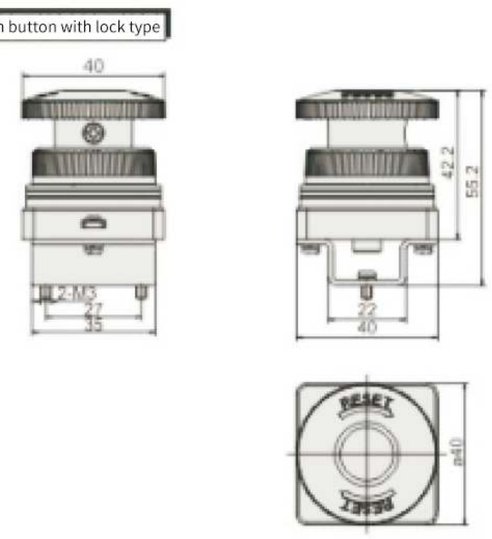

Flat type button

Roller type

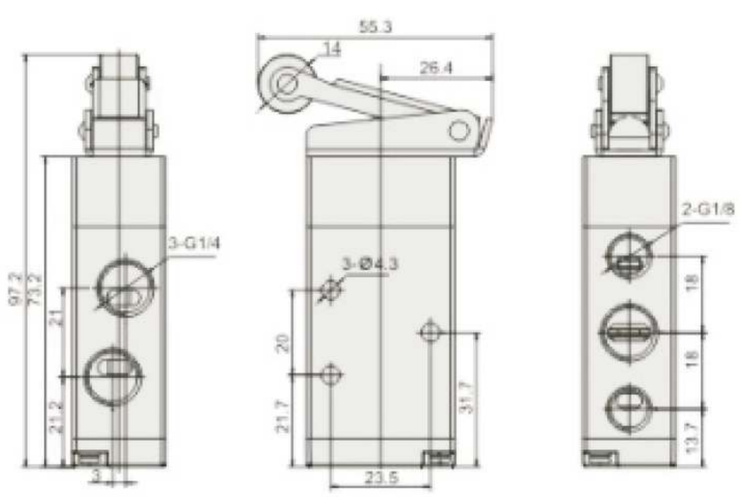

Large round button

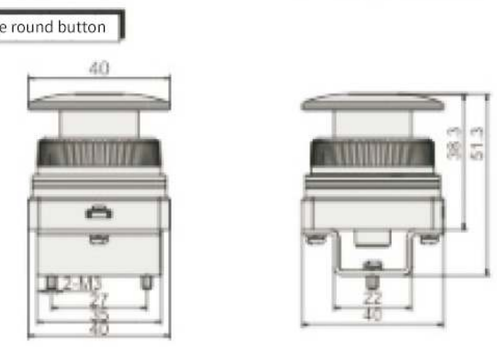

Selective knob

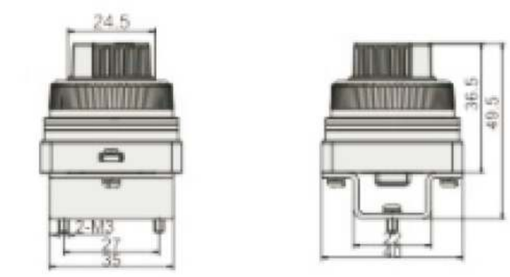

Convex button

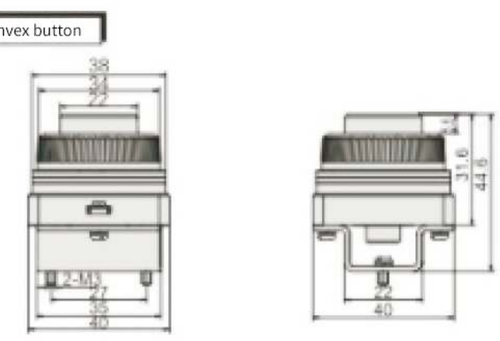

Panel cutout size

Standard Specification

Use of fluids	Air, emotional gas
Operating pressure range	-0.1~1.0MPa
Ambient and fluid temperature	-5~+60℃(but not frozen)
Effective cross-sectional area (Cv value)	2.5mm²(0.14)
Pipe diameter	Side piping:G1/8,Lower piping:M5x0.8
Oil feed	Not required (oil feed should use Turbine No. 1 oil (SOVG32))

Model number indication method

VM1 3 1 01 01 S □

Number of ports	
2	2 pass
3	3 pass

Piping direction and pressure rod length		
0	Long	Side piping
1	Short	
2	Long	Lower piping
3	Short	

Connection diameter	
02	PT1/4

Drive Type		
00	Basic	
01	Roller lever type	
02	Unidirectional roller lever type	
05	Straight plunger	
06	Roller plunger	
07	Transverse roller plunger	
08	Elbow lever type	
30	Button Type	Mushroom head
32		Protruding head
33		Flat head
34	Knob type (2 positions)	
35	Knob type (3 positions)	
36	Knob with lock (2 positions)	

Drive chasing marks		
S	Roller material - hard steel	
R	Button Color	Red
B		Black
G		green
Y		Yellow

Indicator light chasing mark	
Z	With small indicator (lower piping only)

Combinable O,Non-combinable X

Drive Type \ Press bar length		Side piping Long 0	Side piping Short 1	Lower piping Long 2	Lower piping Short 3
Basic type	00	O	O	O	O
Roller lever type	01	X	O	X	O
Unidirectional roller lever type	02	X	O	X	O
Straight plunger	05	O	X	O	X
Roller plunger	06	O	X	O	X
Transverse Roller Plunger	07	O	X	O	X
Elbow lever type	08	O	X	O	X
Mushroom head button type	30	O	X	O	X
Protruding head button type	32	O	X	O	X
Flat head button type	33	O	X	O	X
Knob type (2 positions)	34	O	X	O	X
Knob type (3 positions)	35	X	O	X	O
Knob with lock (2 positions)	36	O	X	O	X

Symbols

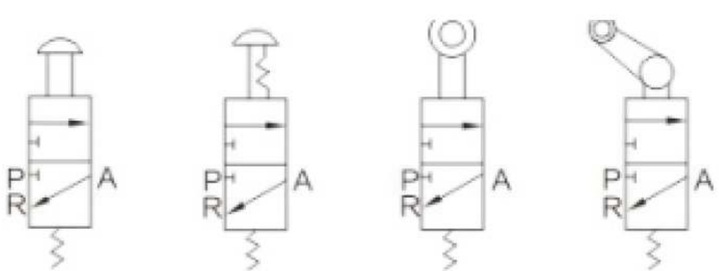

External dimension drawing (mm)

Basic

VM130-01-00/ VM131-01-00

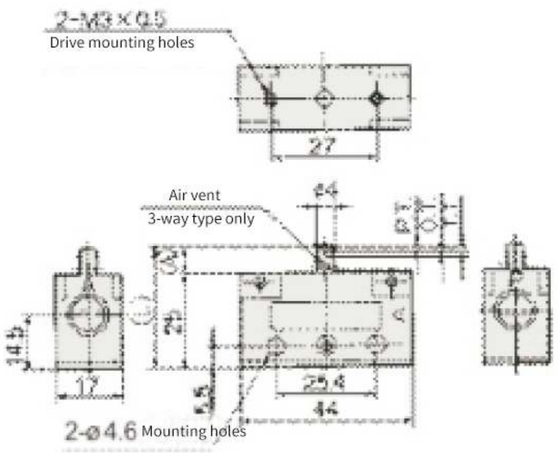

VM130: L=37.5,A=7.5
VM131: L=28.5,A=3.5

F.O.F=19.6N(0.5MPa)
P.T.=1.5mm
O.T.=1.5mm
T.T.=3mm

Rolling wheel lever type

VM131-01-01(S)

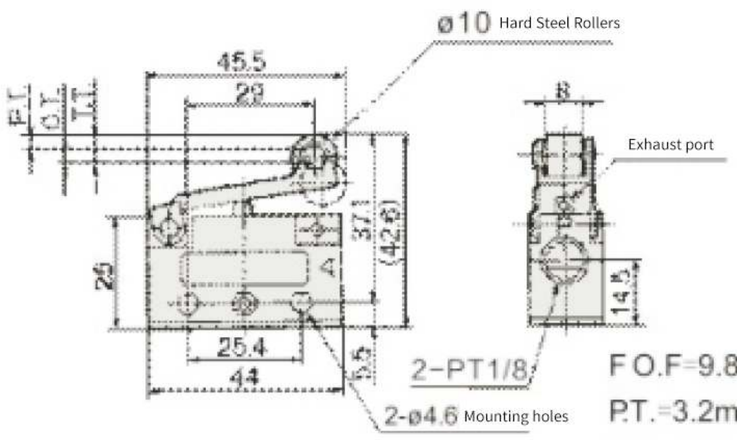

F.O.F=9.8N(0.5MPa)
P.T.=3.2mm
O.T.=2.3mm
T.T.=5.5mm

Knob type (3) position

VM131-01-35□VM151-01-35□

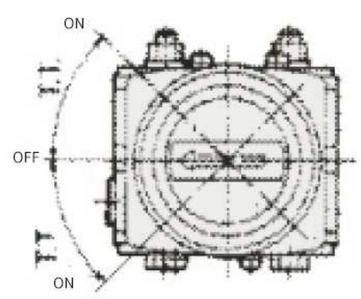

F.O.F=19. 6N(0.5MPa)
T.T.=45°

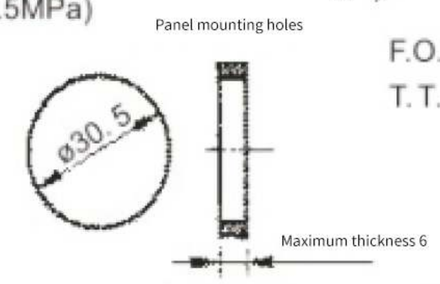

Elbow bar type

VM-1$^{2}_{3}$0-01-08

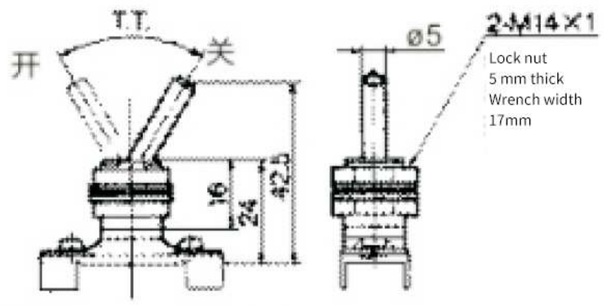

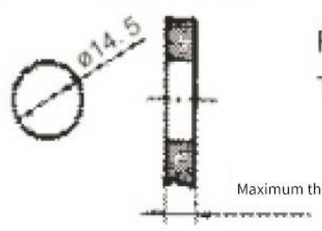

F.O.F=9.8N(0.5MPa)
T.T.=60°

Unidirectional roller lever type

VM131-01-02(S)

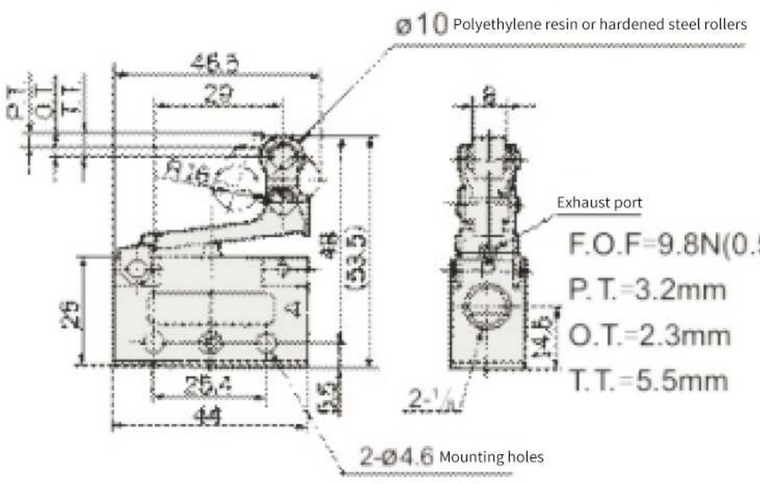

F.O.F=9.8N(0.5MPa)
P.T.=3.2mm
O.T.=2.3mm
T.T.=5.5mm

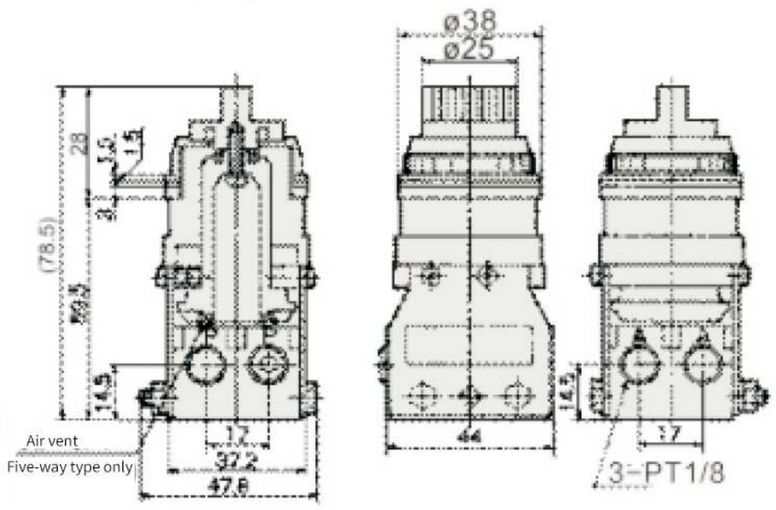

Standard Specification

Use of fluids	Air, emotional gas
Operating pressure range	-0.1~1.0MPa
Ambient and fluid temperature	-5~+60℃(but not frozen)
Effective cross-sectional area (Cv value)	19mm²(1.0)
Pipe diameter	PT1/4
Oil feed	Not required (oil feed should use Turbine No. 1 oil (SOVG32))

Model number indication method

VM2 3 0 02 01 S

Number of ports	
2	2 pass
3	3 pass

Connection diameter	
02	PT1/4

Drive Type		
00	Basic	
01	Roller lever type	
02	Unidirectional roller lever type	
05	Straight plunger	
06	Roller plunger	
07	Transverse roller plunger	
08	Elbow lever type	
30	Button Type	Mushroom head
32		Protruding head
33		Flat head
34	Knob type (2 positions)	
35	Knob type (3 positions)	
36	Knob with lock (2 positions)	

Drive chasing marks		
S	Roller material - hard steel	
R	Button Color	Red
B		Black
G		green
Y		Yellow

Symbols

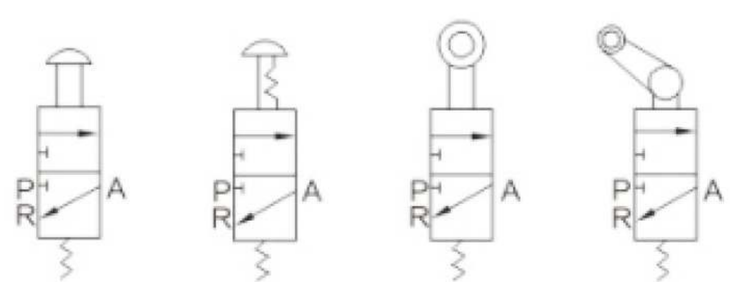

External dimension drawing (mm)

Basic

VM230-02-00

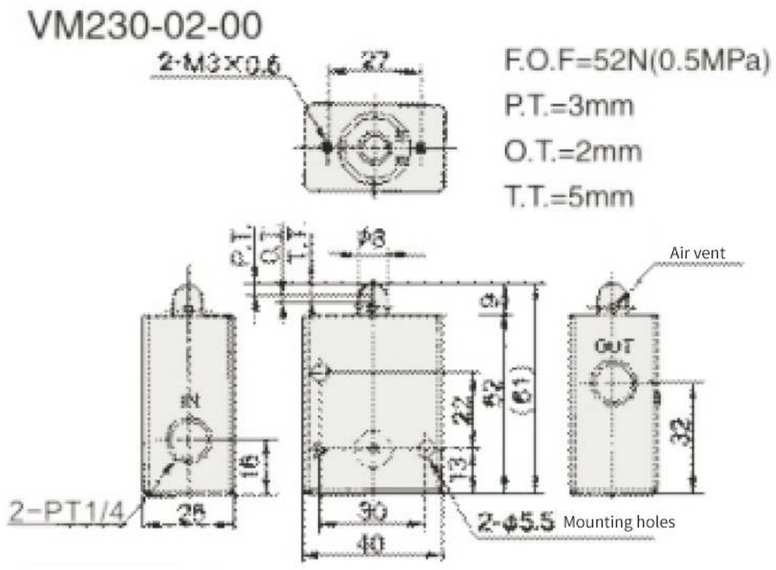

Rolling bar

VM2 2/3 0-02-01(S)

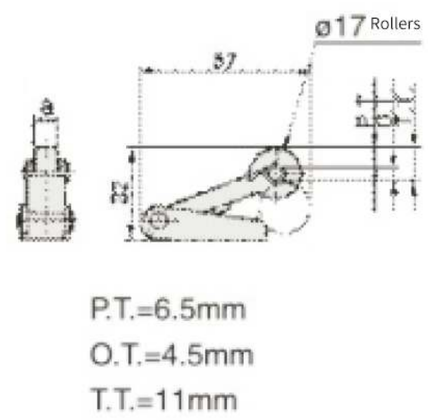

Knob 3 positions

VM230-02-35 □ /VM250-02-35 □

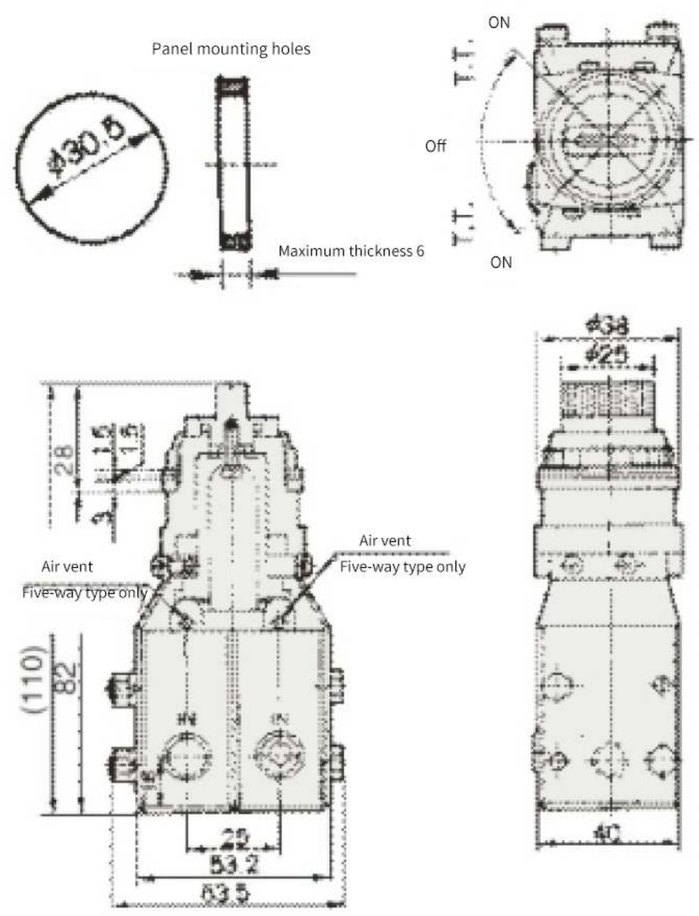

Foot type

VM230-02-40

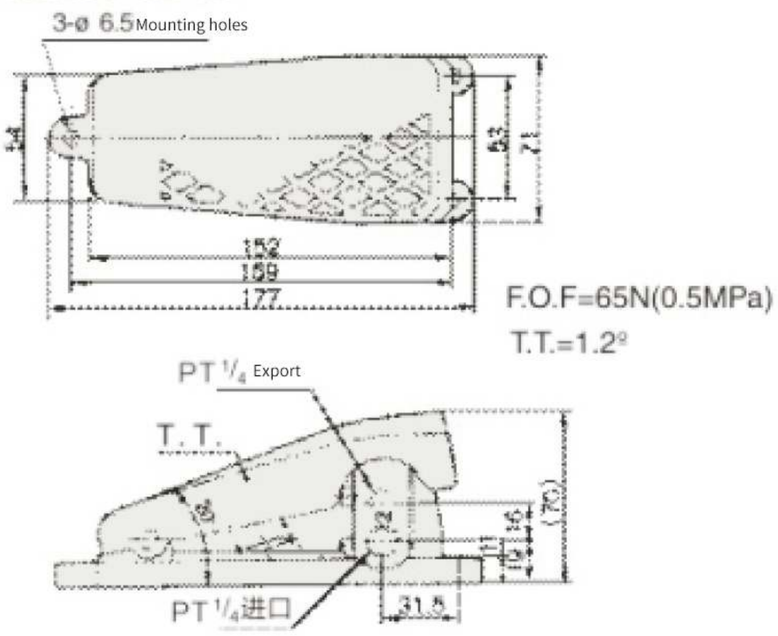

One-way roller lever

VM2 2/3 0-02-02(S)

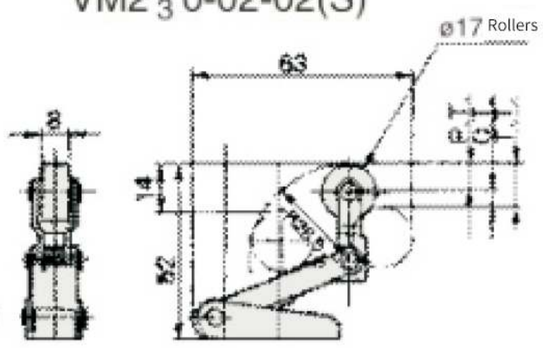

Model	Piping caliber	Number of positions	Effective cross-sectional area	Operating pressure range	Use of fluid	Ambient temperature
2V	M5	Two-position two-way	1.9mm²	0.05-0.9Mpa	Air	0-60℃
3V	M5	Two-position three-way	1.9mm²			
2P	M5	Two-position two-way	1.9mm²			
3P	M5	Two-position three-way	1.9mm²			
4V	M5	Two-position five-way	1.9mm²			
4P	M5	Two-position five-way	4.5mm²			
4PP	G1/8	Two-position five-way	4.5mm²			
31V	G1/8	Two-position three-way	4.5mm²			
31P	G1/8	Two-position tee	4.5mm²			
41V	G1/8	Two-position five-way	4.5mm²			
41P	G1/8	Two five-way	4.5mm²			
41PP	G1/8	Two-position five-way	4.5mm²			

2V/3V

Indication Symbols

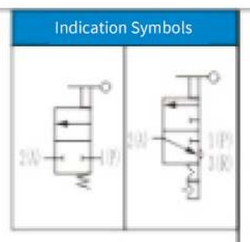

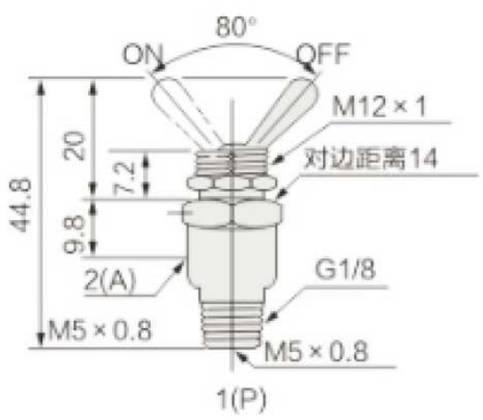

2P/3P

Indication Symbols

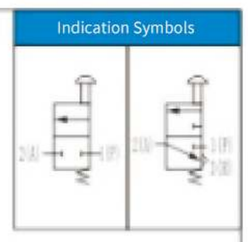

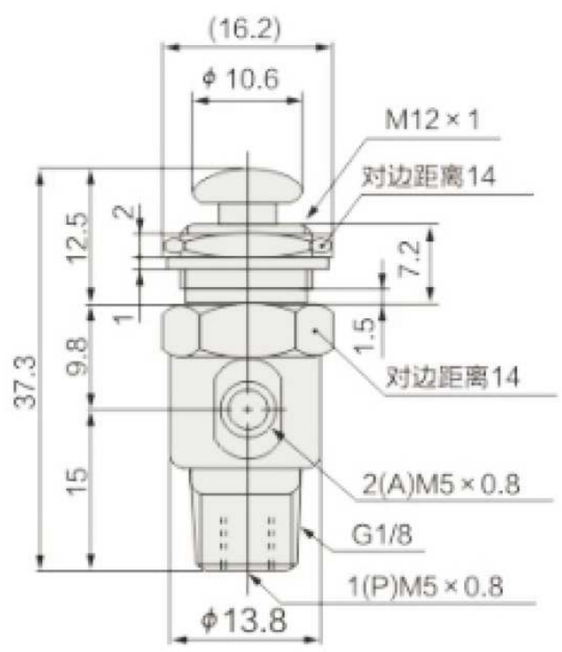

4V

Indication Symbols

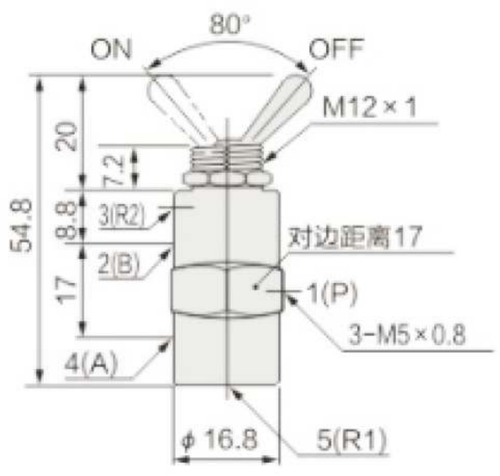

4P

Indication Symbols

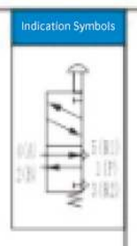

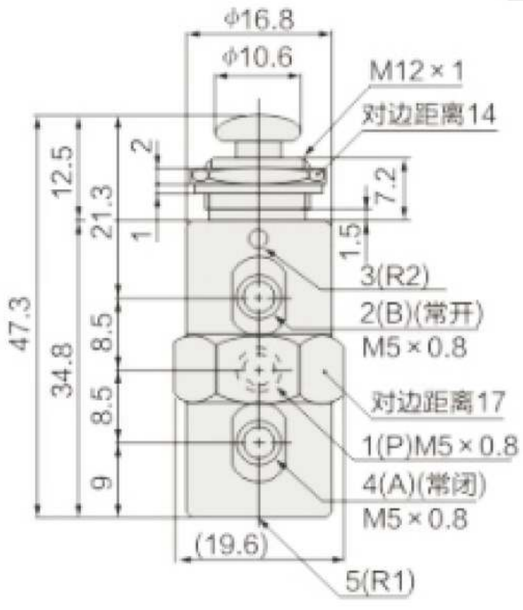

4PP

Indication Symbols

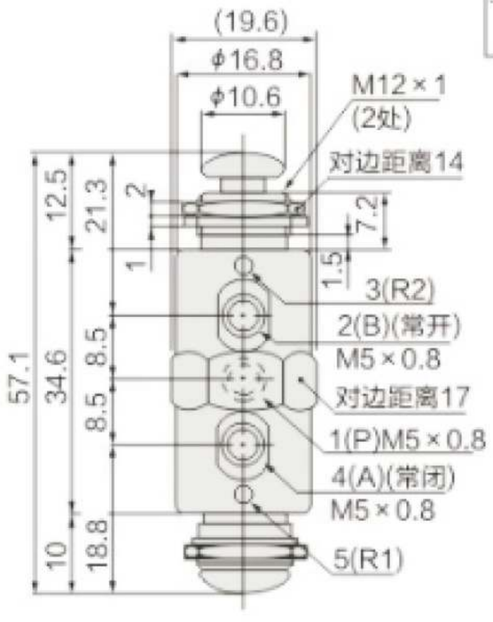

31V

Indication Symbols

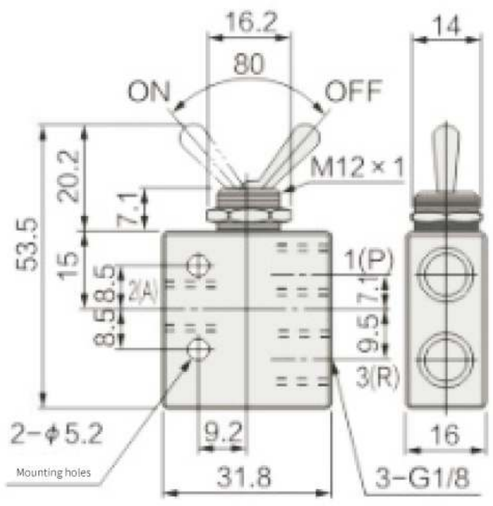

31P

Indication Symbols

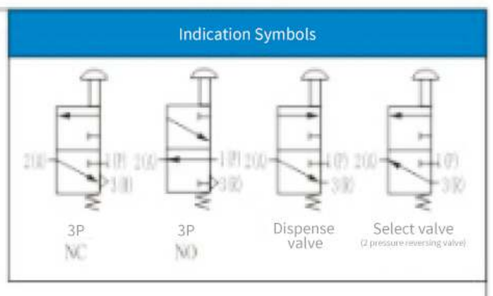

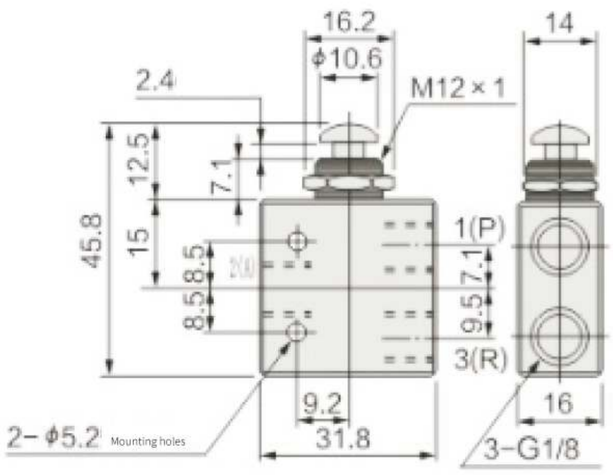

41V

Indication Symbols

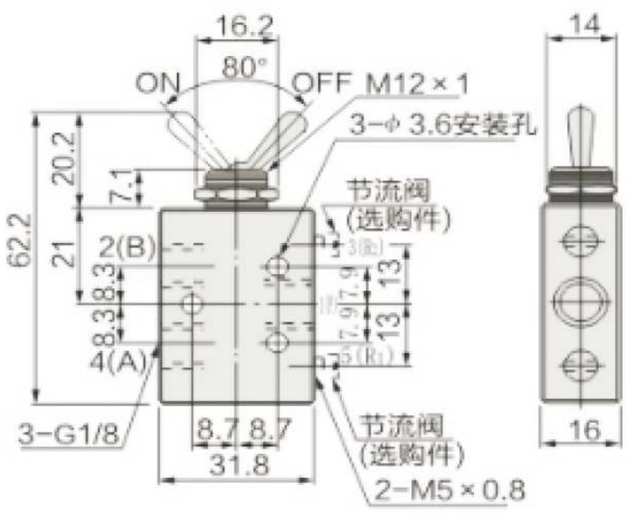

41P

Indication Symbols

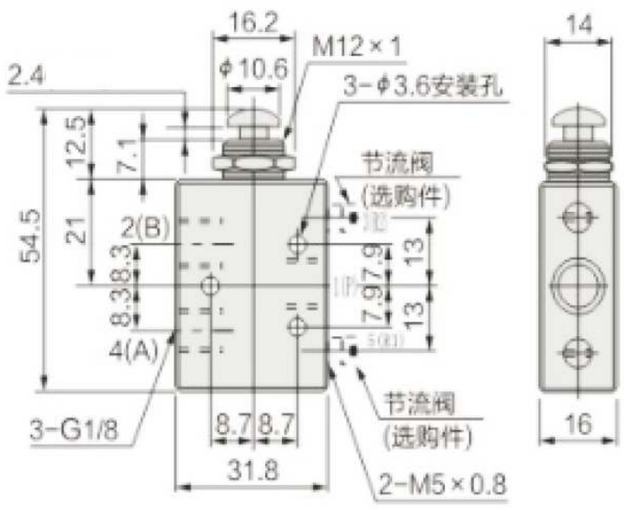

41PP

Indication Symbols

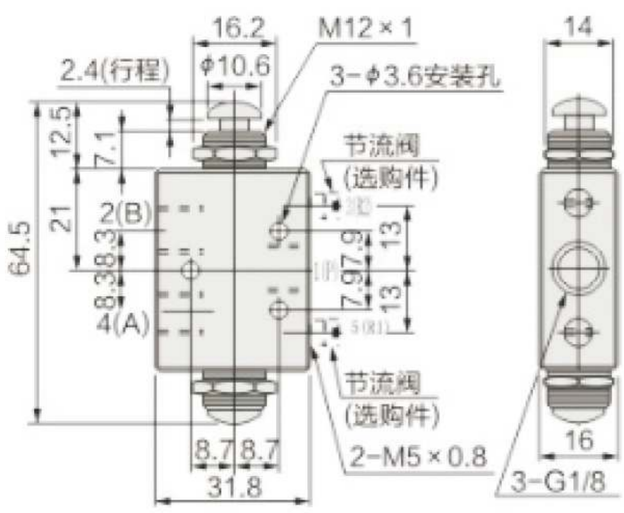

34C roller cam type

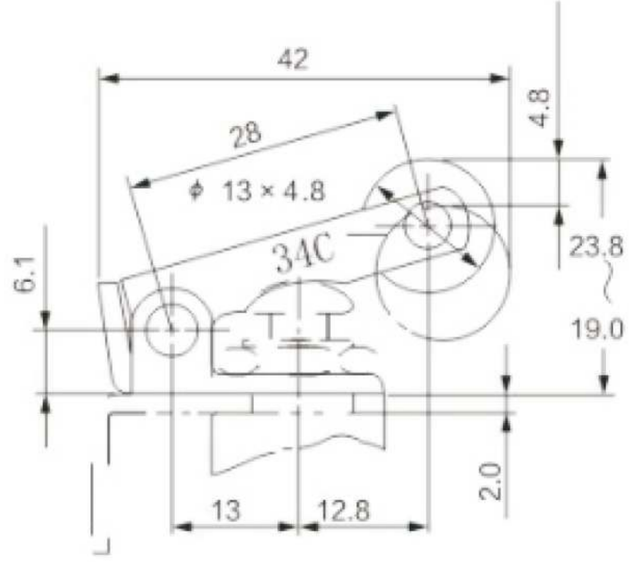

● Twice the travel of the basic valve

34T fingertip operation type

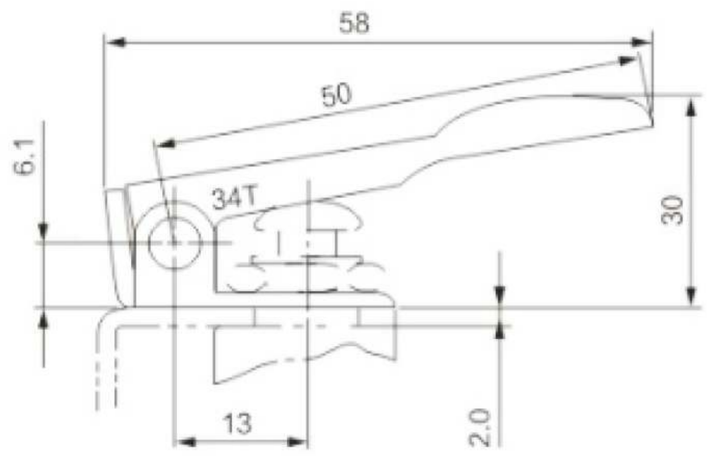

250610

250622

250612

Standard Specification

Model	Number of positions	Control form	Interface thread	Through diameter (mm)	Operating pressure range	Ambient temperature
XQ230410	Two-position tee	Top bar type	G1/8	4	0-0.8Mpa	-10-60℃
XQ230610	Two-position tee	Top bar type	G1/4	6		
XQ250410	Two-position five-way	Top bar type	G1/8	4		
XQ250610	Two-position five-way	Top bar type	G1/4	6		
XQ230422	Two-position tee	Hand Pull Type	G1/8	4		
XQ230622	Two-position tee	Hand Pull Type	G1/4	6		
XQ250422	Two-position five-way	Hand Pull Type	G1/8	4		
XQ250622	Two-position five-way	Hand Pull Type	G1/4	6		
XQ230412	Two-position tee	Bidirectional roller type	G1/8	4		
XQ230612	Two-position tee	Bidirectional roller type	G1/4	6		
XQ250412	Two-position five-way	Bidirectional roller type	G1/8	4		
XQ250612	Two-position five-way	Bidirectional roller type	G1/4	6		
XQ230413	Two-position tee	Unidirectional roller type	G1/8	4		
XQ230613	Two-position tee	Unidirectional roller type	G1/4	6		
XQ250413	Two-position five-way	Unidirectional roller type	G1/8	4		
XQ250613	Two-position five-way	Unidirectional roller type	G1/4	6		

Symbols

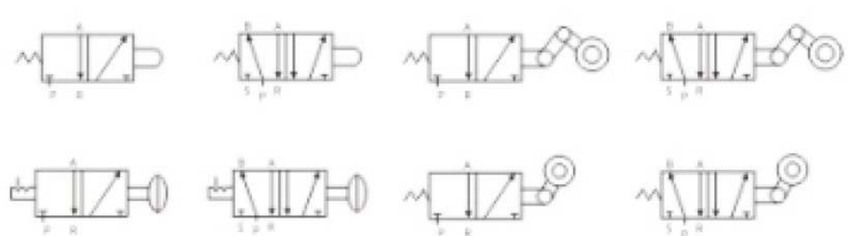

Model indication method

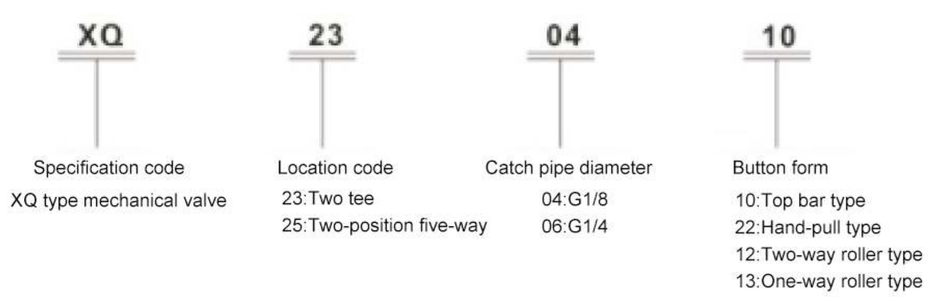

Internal structure

Top lever valve

Two-position tee XQ230410

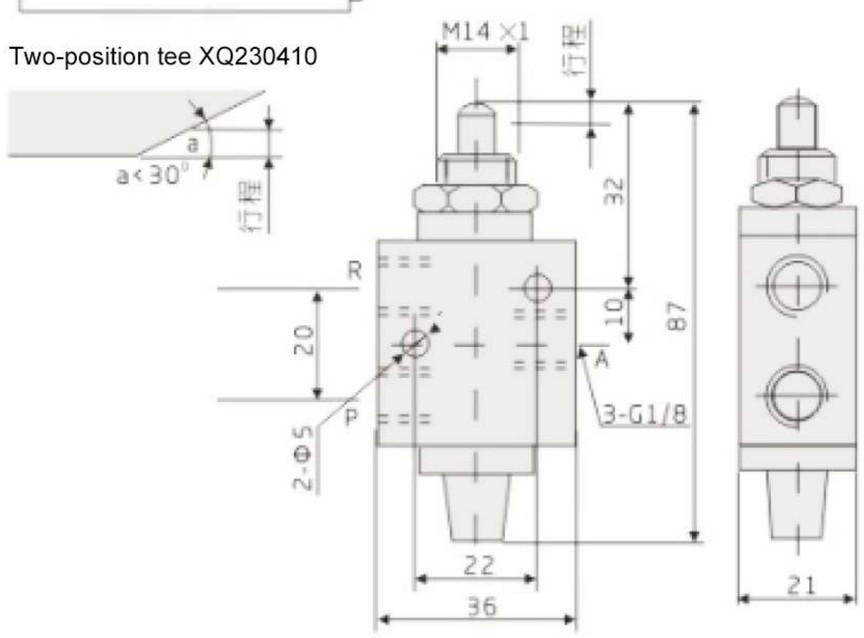

Two-position tee XQ230610

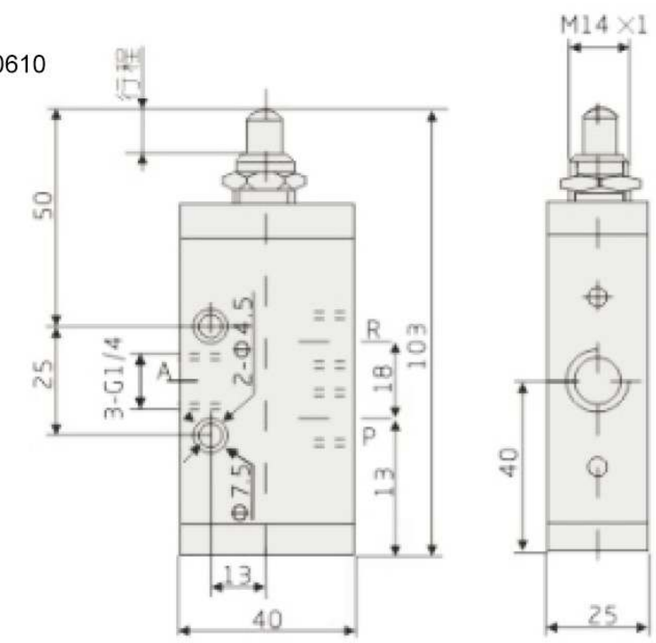

Two-position tee XQ230610

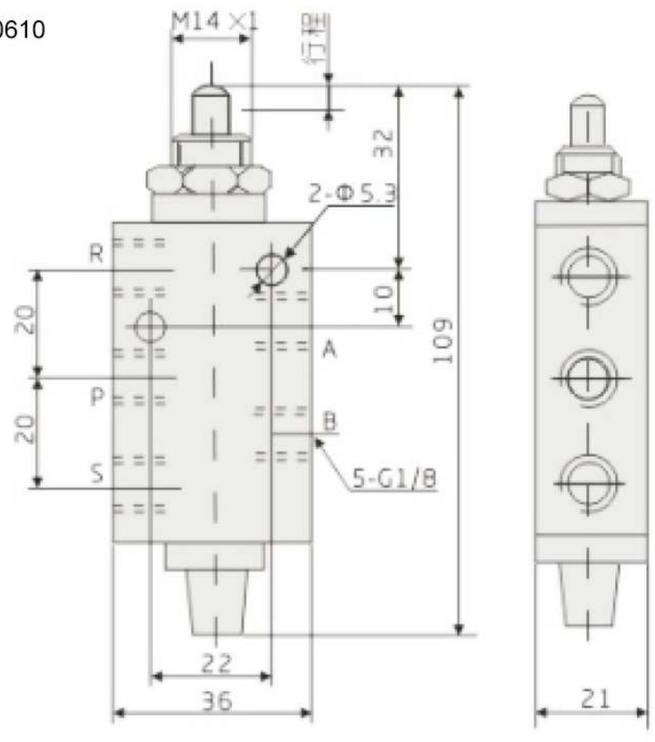

Two-position five-way XQ250610

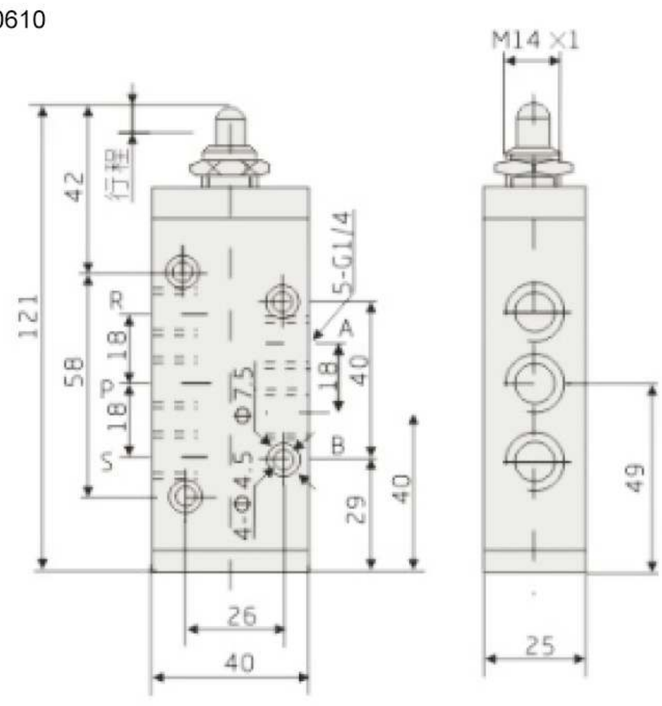

One-way lever roller valve

Two-position tee XQ230413

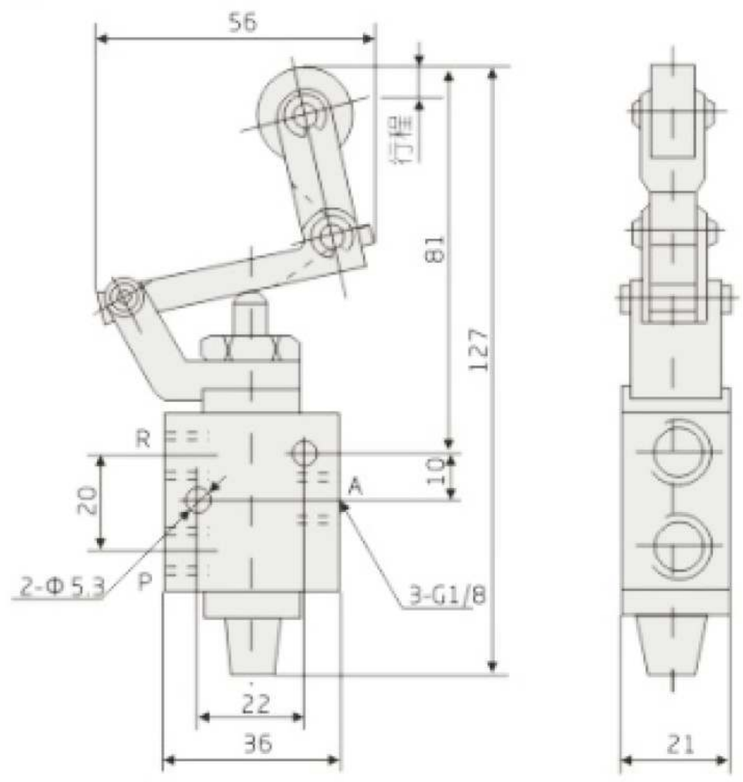

Two-position tee XQ230613

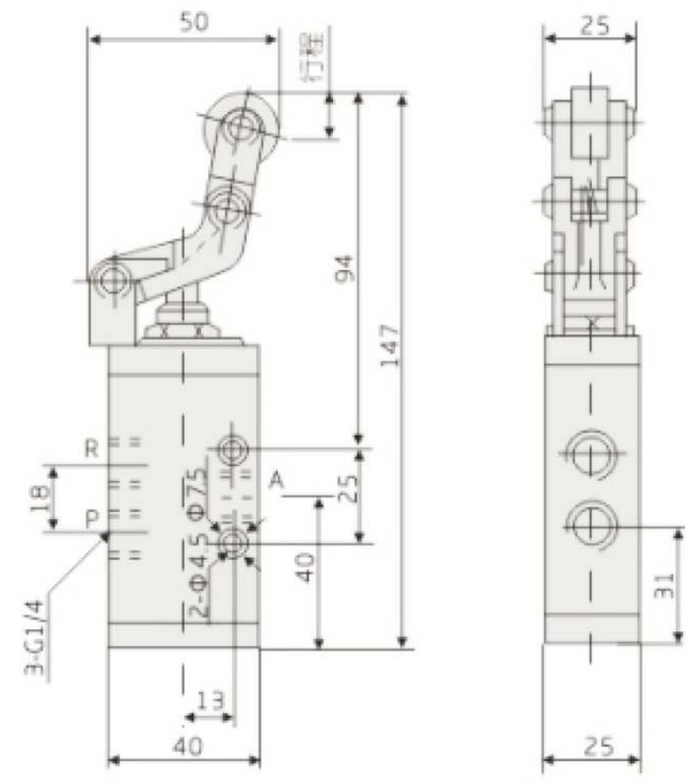

Two-position five-way XQ250413

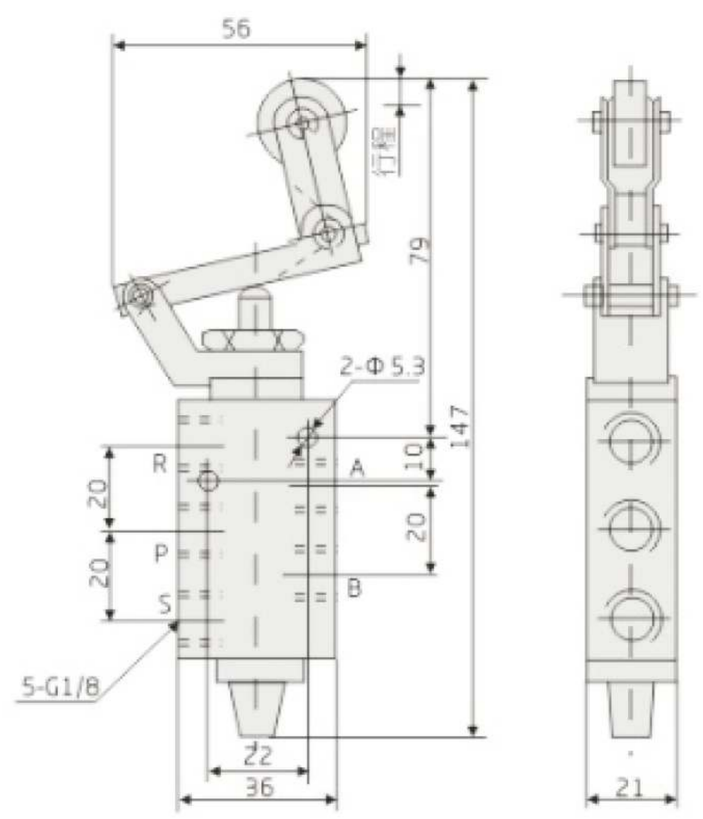

Two-position five-way XQ250613

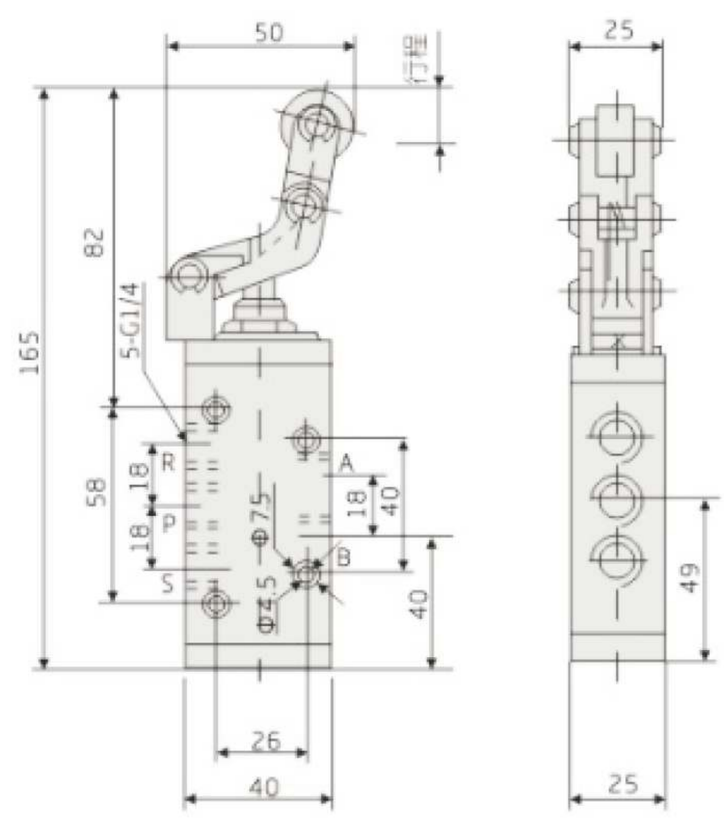

Hand Pull Valve

Two-position tee XQ230422

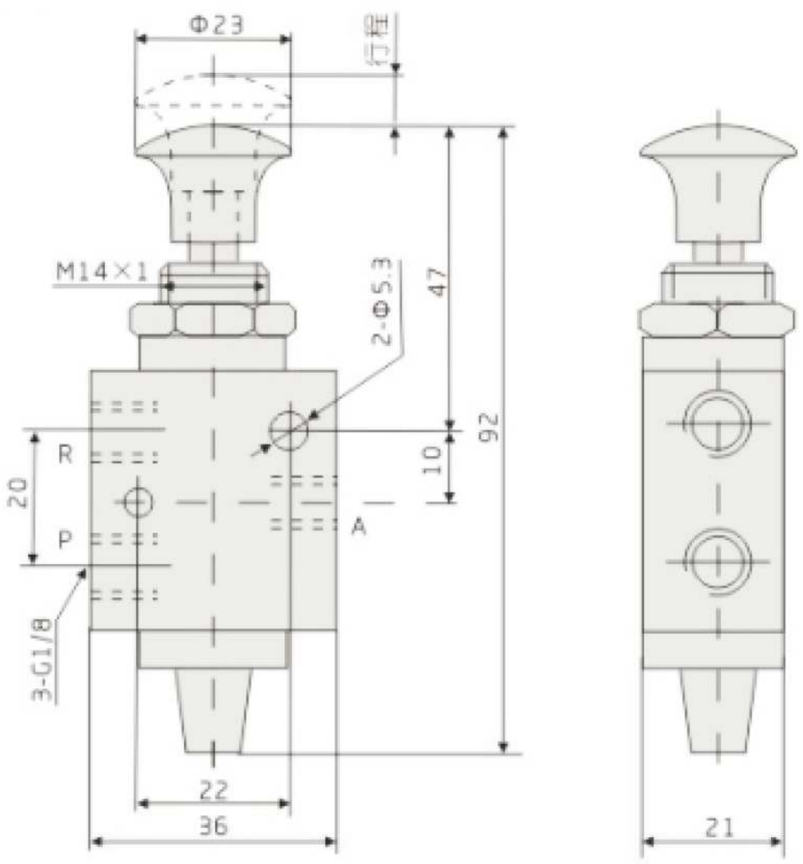

Two-position tee XQ230622

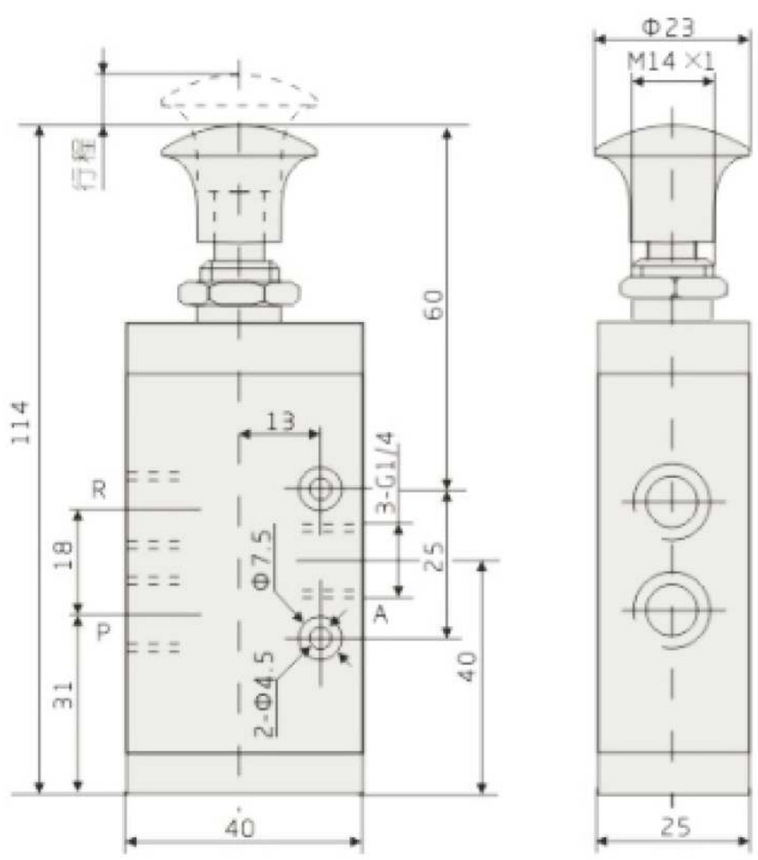

Two-position five-way XQ250422

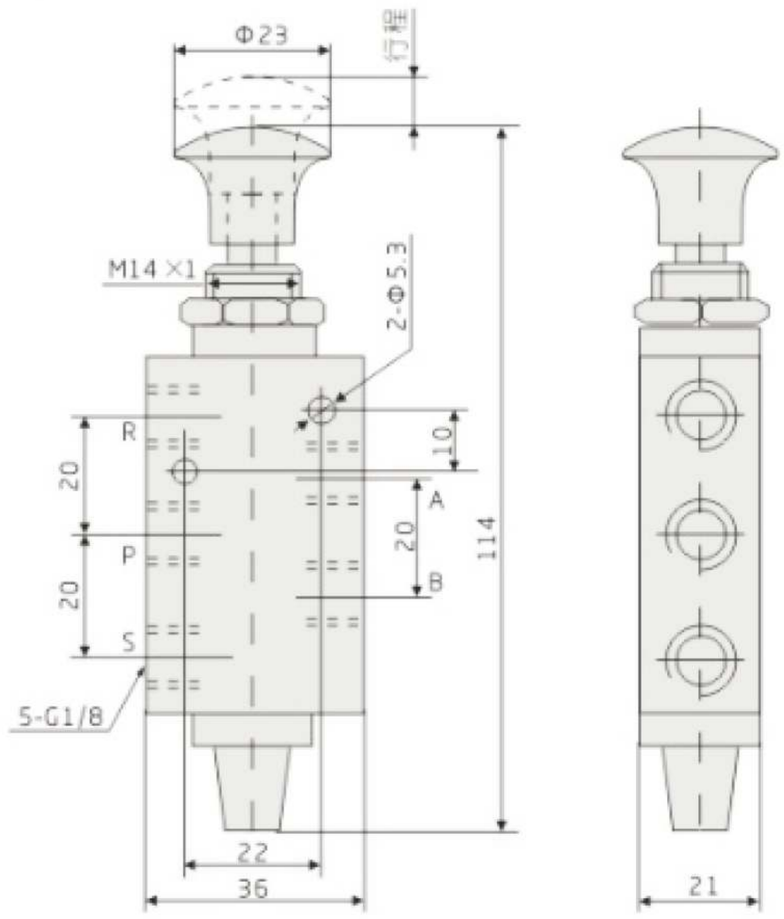

Two-position five-way XQ250622

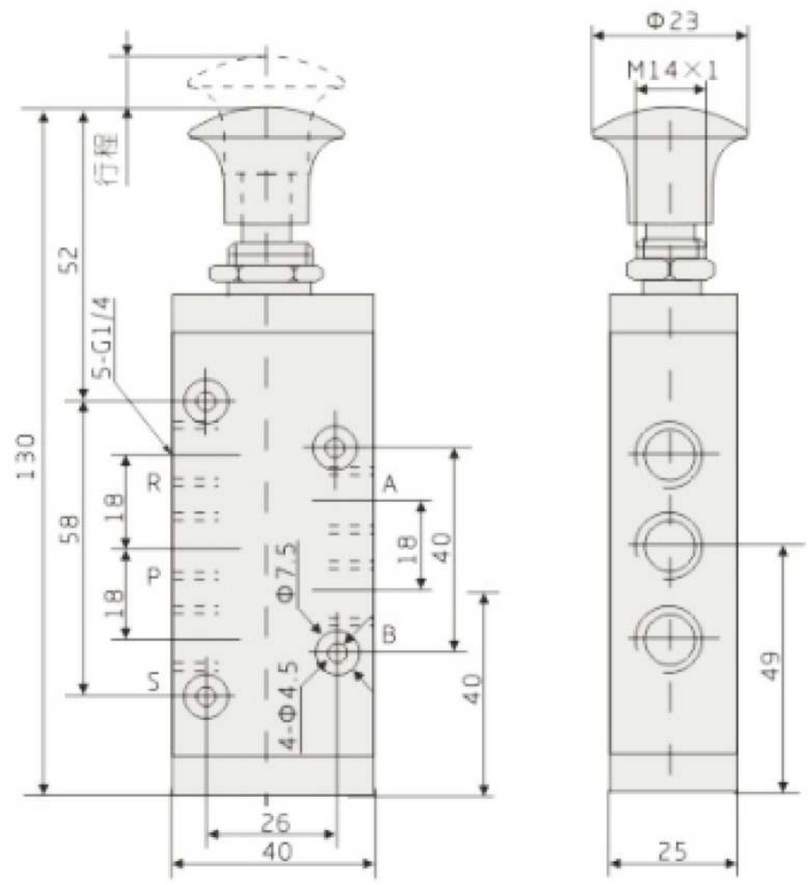

Lever roller valve

Two-position tee XQ230412

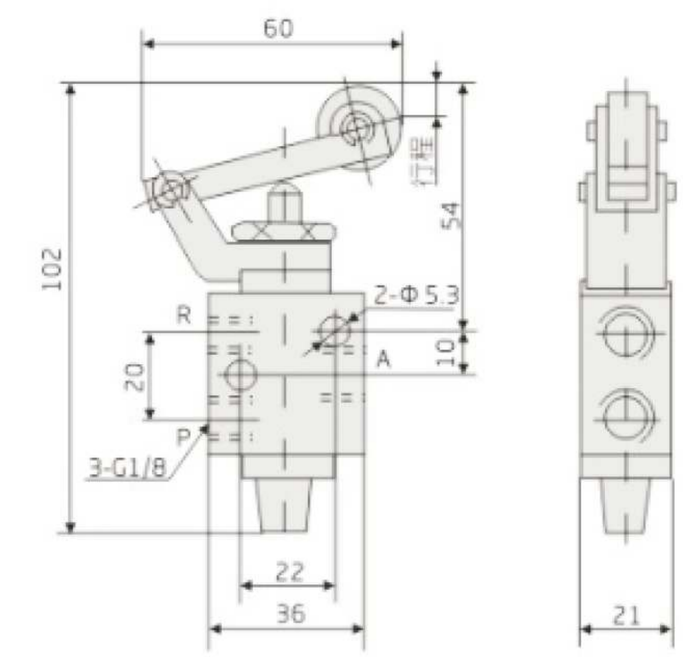

Two-position tee XQ230612

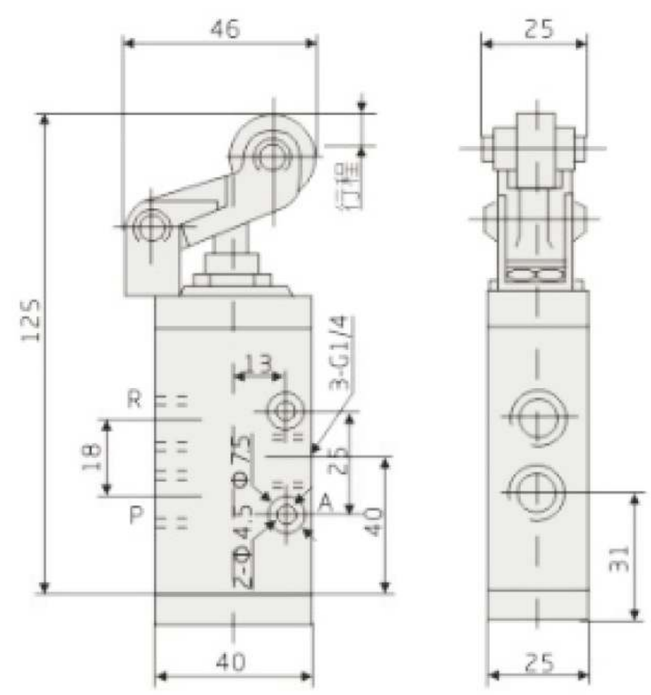

Two-position tee XQ250412

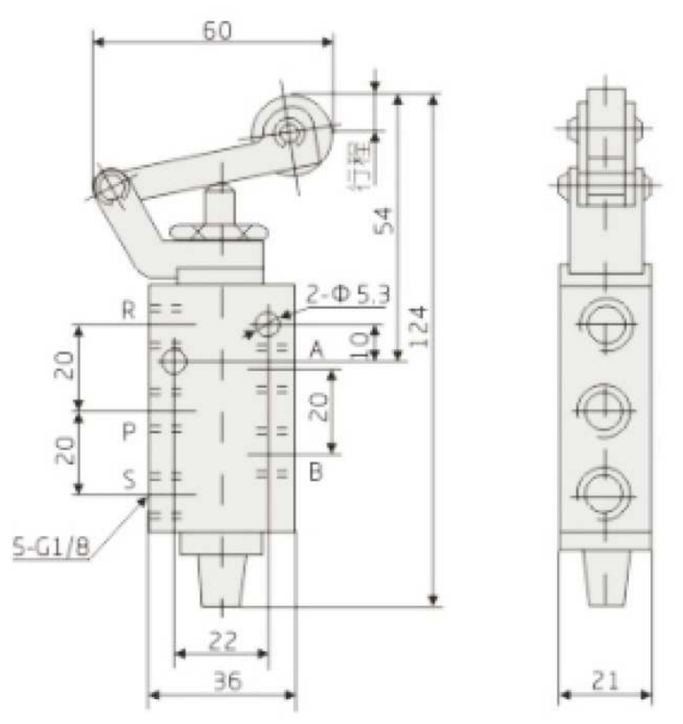

Two-position tee XQ250612

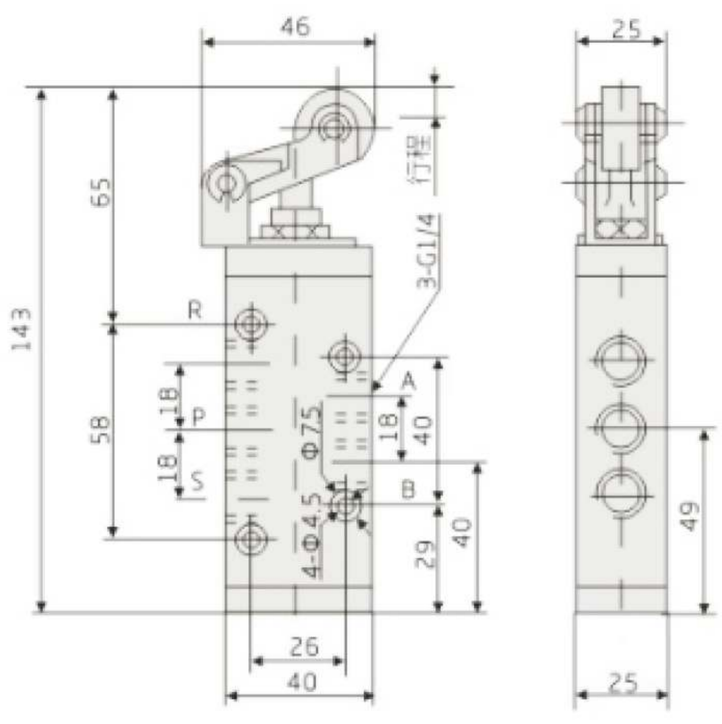

Standard Specification

Model	K23R5-L8	K23R7-L15	K255-L8	H25T7-L15
Working pressure Mpa	0-0.8			
Effective cross-sectional area m²	20			
Leakage volume cm³/min	<30	<50	<50	<100
Ambient temperature ℃	-65			
Medium temperature ℃	-55			
Life time 10,000 times	≥150			
Operating force Kg	1.5			

External dimension drawing (mm)

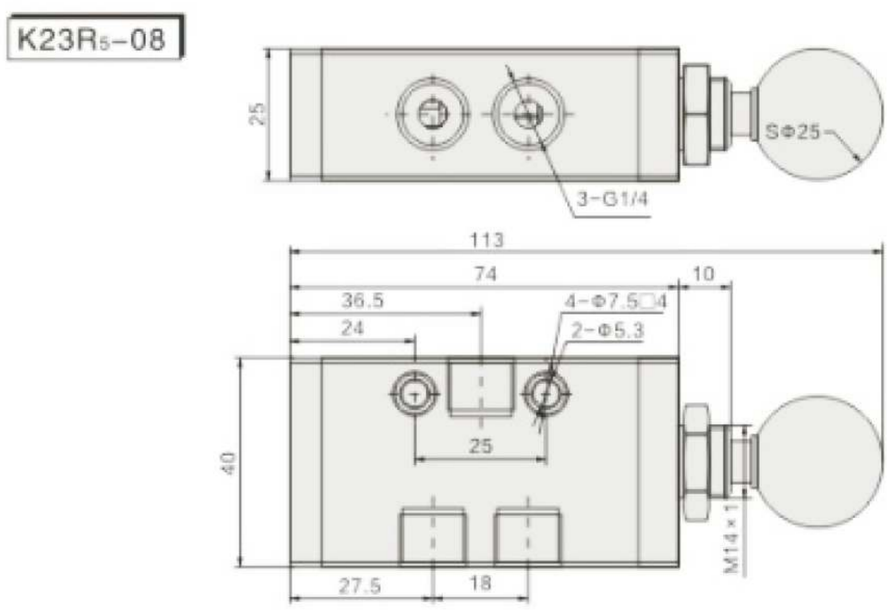

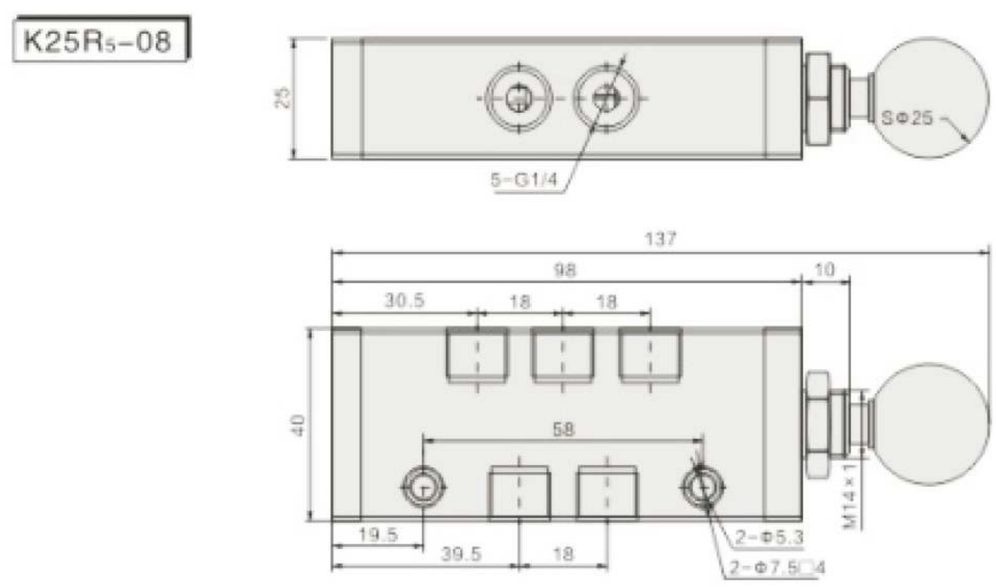

Standard Specification

Model	K23R7-8	K257-8
Working medium	Air (filtered by a 40um or higher filter)	
Pipe diameter	G1/4	G1/4 G3/8 G1/2
Working pressure	0.05-0.8Mpa	
Medium temperature	-10-55℃	
Ambient temperature	-5-55℃	
Effective cross-sectional area	10mm²	20mm²
Leakage volume	≤50cm³/min	
Life	≥200	

Symbols

Model indication method

K	23	R7	8
Series code	Number of positions	Form code	Catch pipe diameter
	23:Two-position tee 25: Two-position five-way	R :Foot valve	06: G1/8" 08: G1/4 10: G3/8" 15: G1/2"

External dimension drawing (mm)

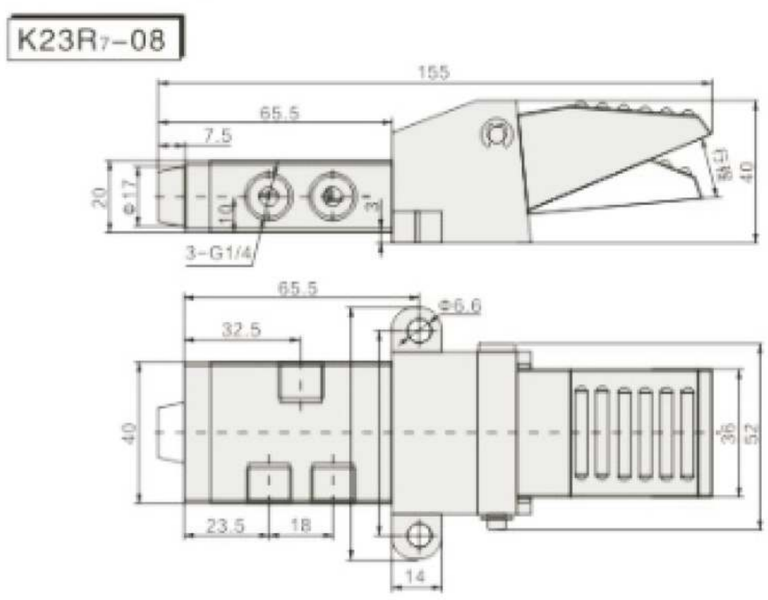

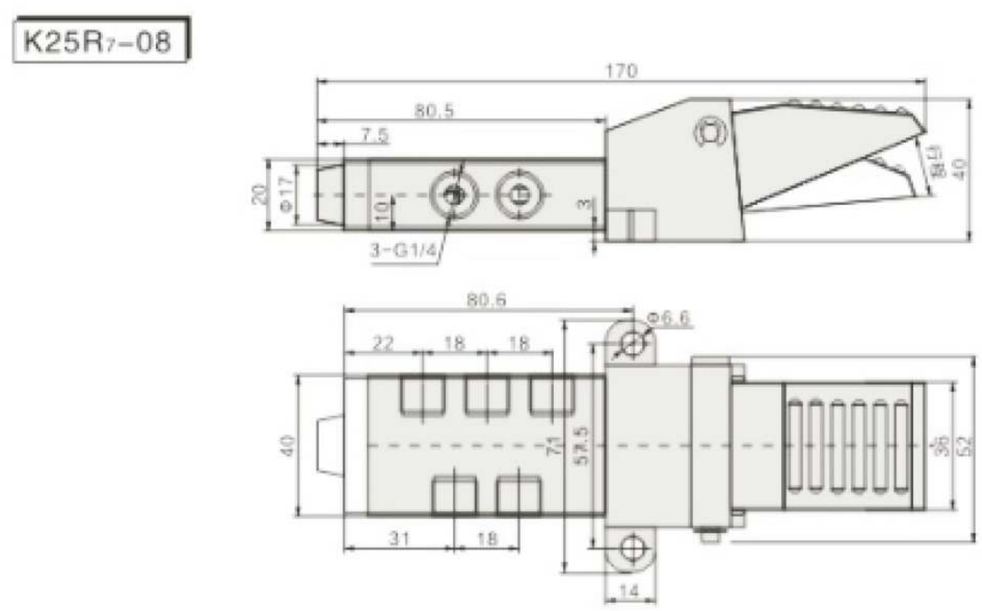

FV-02

3FM210-06
3FM210-08

3F210-06
3F210-08

Standard Specification

Model	FV-02	3F210-06	3FM210-06	3F210-08	3FM210-08
Working medium	Air (filtered by a 40um or higher filter)				
Action mode	Foot control direct-acting normally closed type				
Pipe diameter	G1/8	PT1/8	G1/8	PT1/4	G1/4
Number of positions	Three mouths and two bits				
Use pressure range	0-0.8MPa(0-114psi)				
Guaranteed pressure resistance	1.5MPa(15bar)(215psil)				
Operating temperature	-20-70				
Body material	3FM:Plastic;3F:Aluminum alloy				
Lubrication	Not required				

1 Take over tooth type with PT, NPT teeth available.

Model number indication method

FV — 02

Specification code — Catch pipe diameter

FV:Three ports and two positions Foot valve (aluminum case)
02:G1/4

3FM210 - 08 L

Specification code — Catch pipe diameter — Type code

3FM:Two-way three-way foot valve mini type
3F:Two-way three-way foot valve

06:G1/8
08:G1/4

3FM: No such option
Empty: Standard type
L:With lock type

Symbols

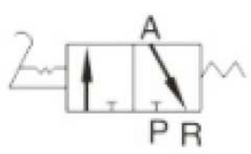

External dimension drawing (mm)

FV-02

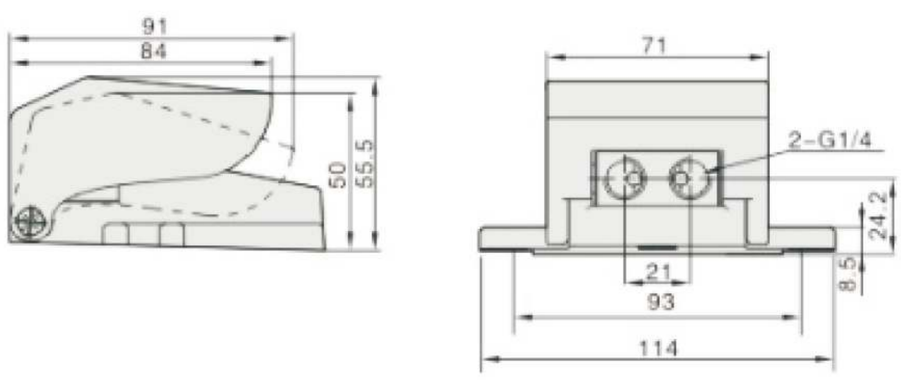

3FM210-06
3FM210-08

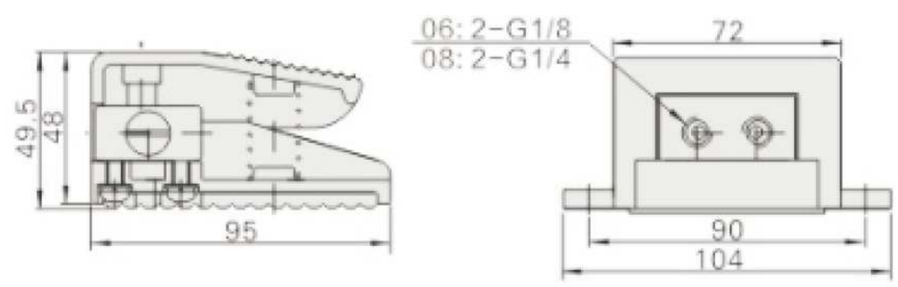

3F210-06
3F210-08

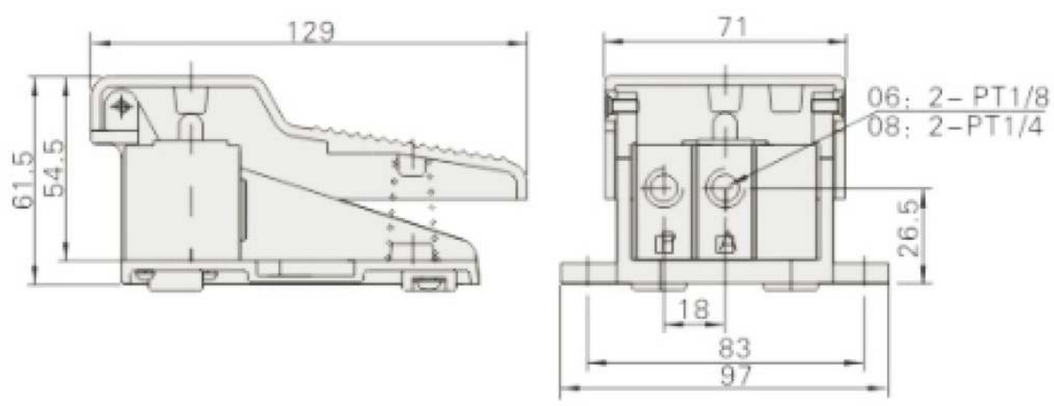

3F210-06L
3F210-08L

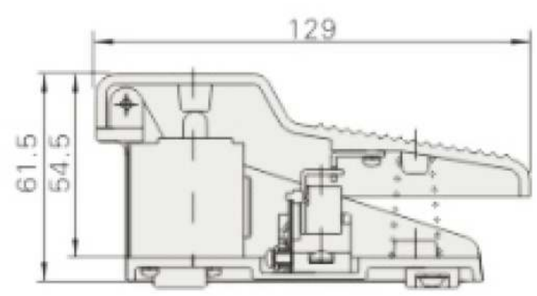

Standard Specification

Model	4F210-08	4F210-08L	4F210-08F	4F210-08LF
Working medium	Air (filtered by a 40um or higher filter)			
Action mode	Foot controlled direct acting type			
Pipe diameter	PT1/4			
Number of positions	Five mouths and two seats			
Use pressure range	0-0.8MPa(0-114psi)			
Guaranteed pressure resistance	1.5MPa(15bar(215psi)			
Operating temperature	-20-70			
Body material	Aluminum alloy			
Lubrication	Not required			

1Takeover tooth type with NPT, G tooth available.

Symbols

No lock attached

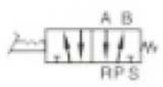

With lock

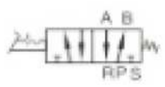

Model number indication method

4F210 - 08 L

Specification code
4F210:Five-port two-position foot valve

Catch pipe diameter
08:PT1/4

Type code
Blank:Standard type
L:With lock type
With shield type
LF:Locking and shield type

Product Features

1. Aluminum pedal, direct-acting design, stable and reliable.
2. If the direction change keeps longer, you can choose the attached locking type.
3. The locking mechanism is stable and reliable, and the unlocking is light and quick. However, due to the limitation of structure size, it can not withstand frequent strong impact.
4. High-strength plastic protective cover is optional.

Internal structure

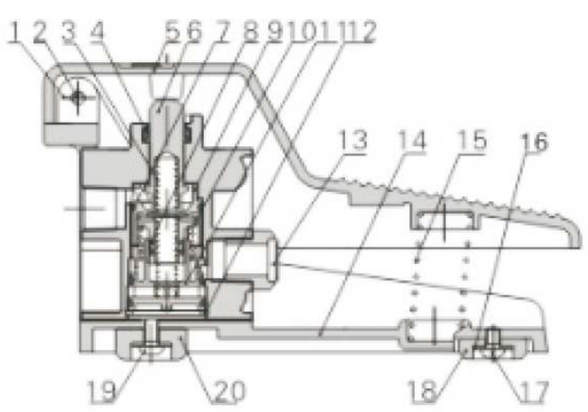

NO.	Name	NO.	Name	NO.	Name
1	Shaft pins	8	O-ring	15	Spring
2	Countersunk head sc	9	Front cover	16	Gasket
3	Spring	10	Piston	17	Round head screws
4	E-type grommet	11	Bottom cover	18	Small Foot Pad
5	Pedal	12	C-ring	19	Round head screws
6	Shaft core	13	Muffler	20	Large Foot Pad
7	O-ring	14	Base		

Note

Note:The locking type should be greased regularly to ensure the normal operation of the mechanism

External dimension drawing (mm)

4F210-08

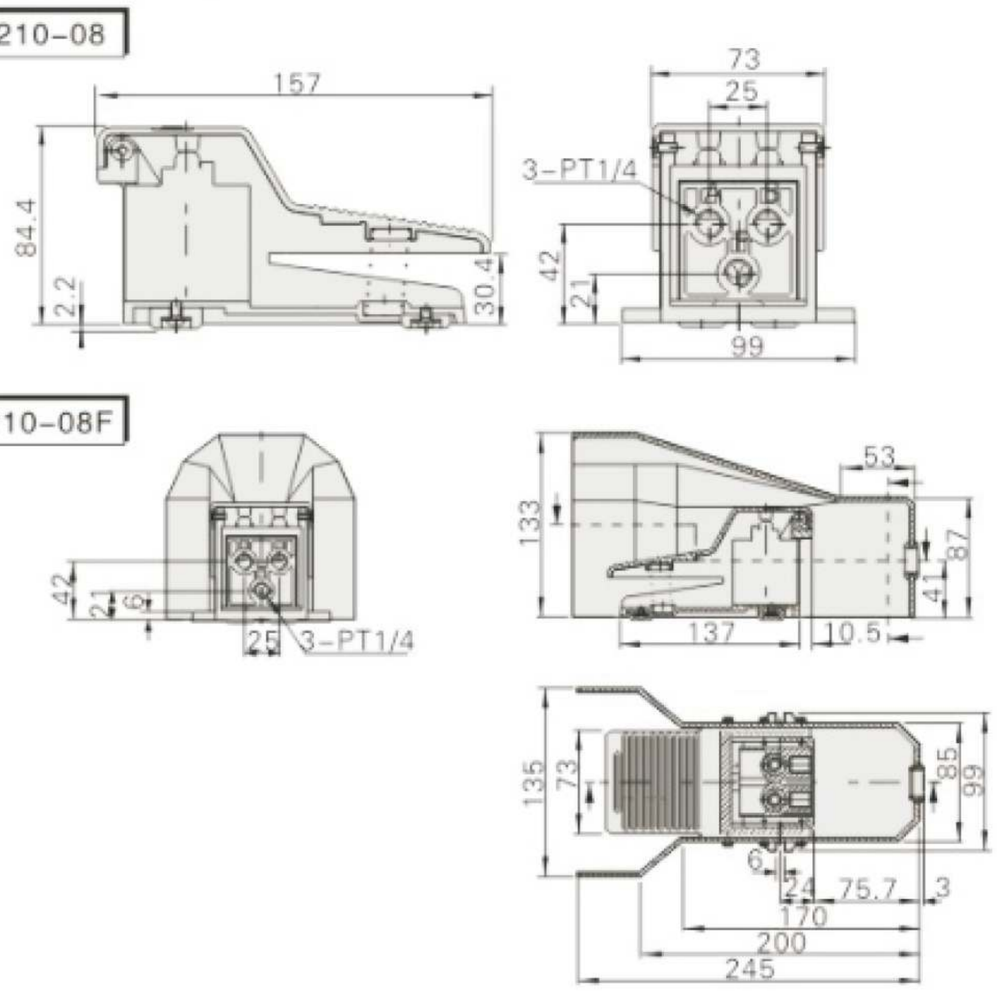

4F210-08L

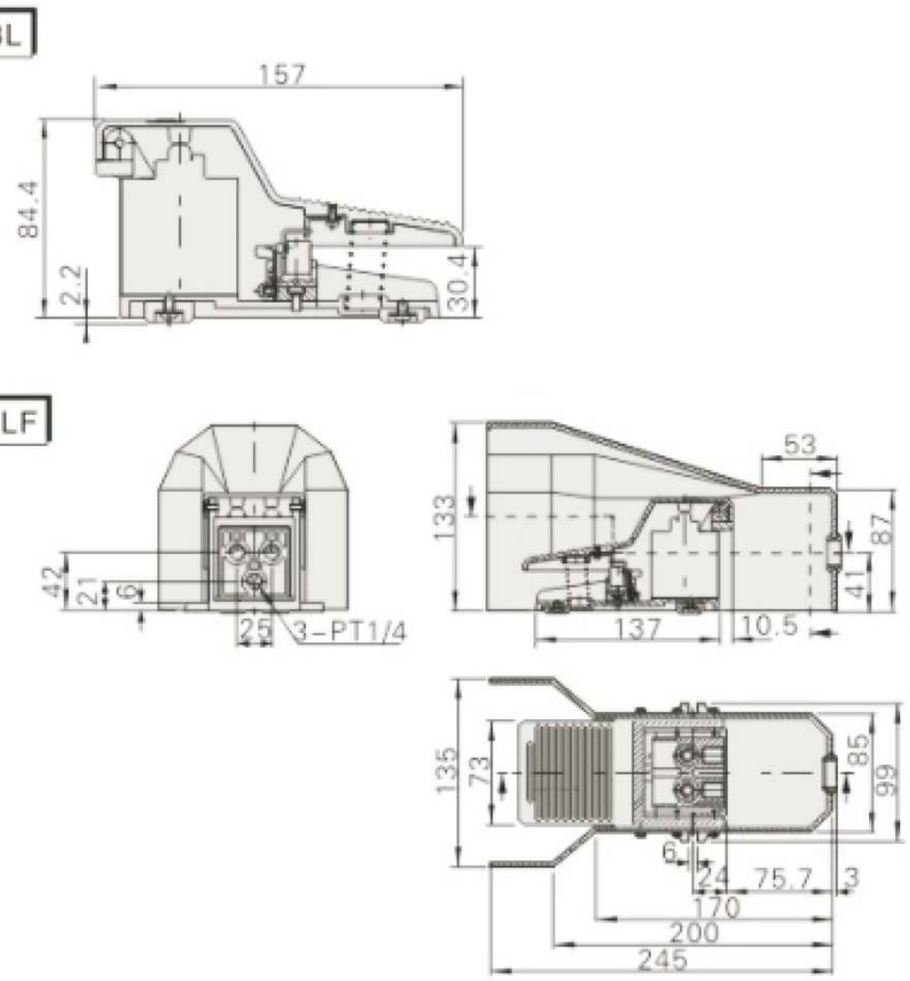

4F210-08F

4F210-08LF

Standard Specification

Item/Model	FV320	FV420
Working medium	Air (filtered by 40pm filter)	
Position number	Two-position tee	Two-position four-way
Action mode	Direct-acting type	
Pipe diameter	06:G1/8	08:G1/4
Use pressure	0-0.8Mpa(0-114Psi)	
Working temperature	-5-60℃(28-140°F)	
Lubrication	Not required	

Symbols

FV320

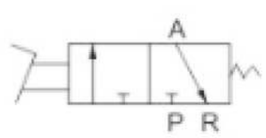

FV420

Model number indication method

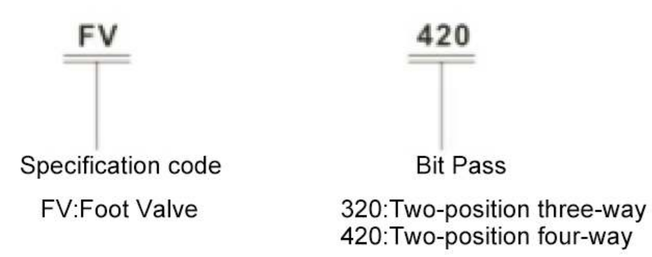

External dimension drawing (mm)

FV320

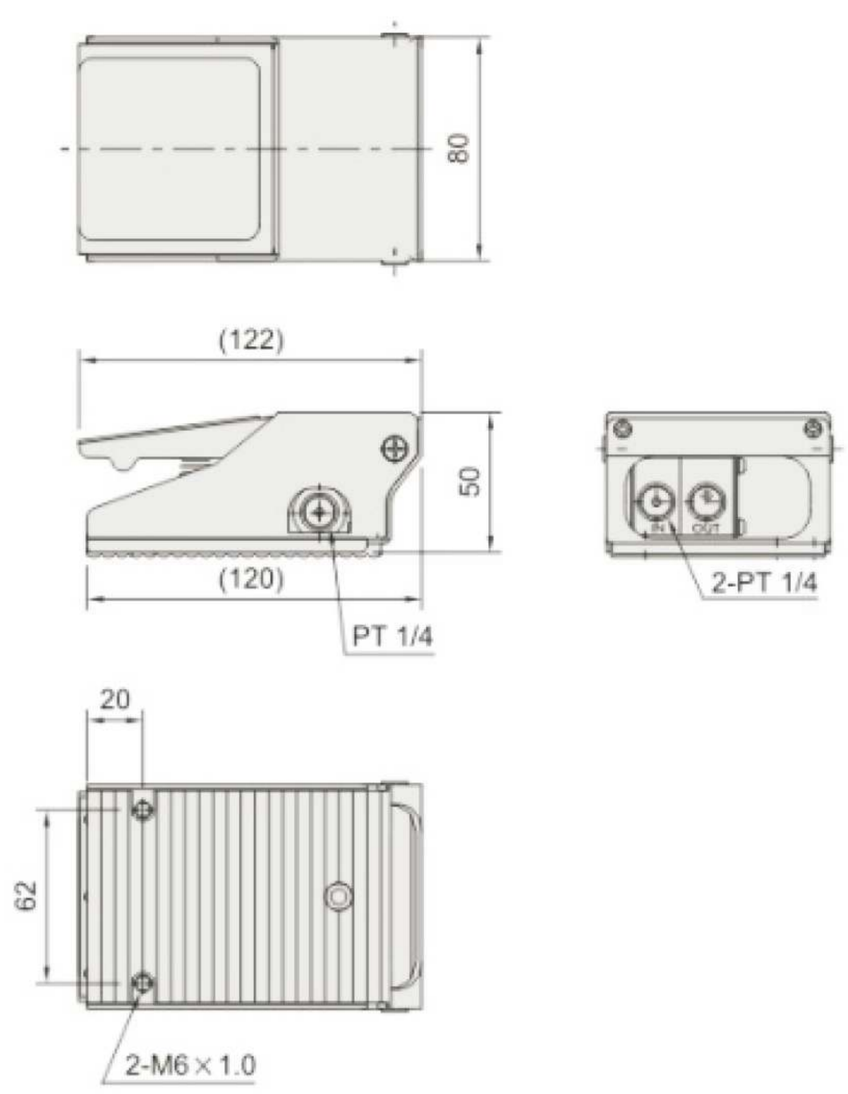

FV320

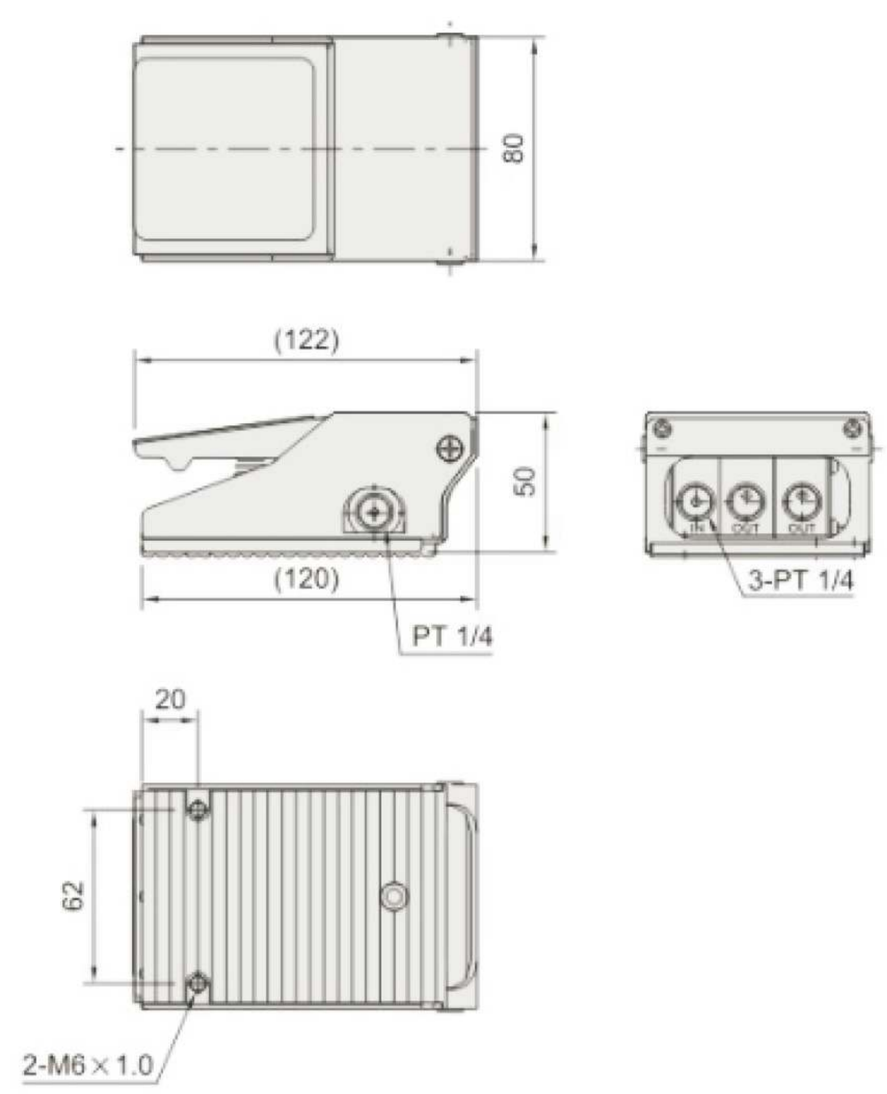

Standard Specification

Model	CV-10HS	CV-15HS	CV-20HS
Fluid used	Oil-free compressed air		
Surrounding temperature ℃	0~60(Do not freeze)		
Use pressure range Mpa	0.1-0.6		
Nozzle diameter φmm	1	1.5	2
Rated pressure Mpa	0.5		
Suction flow rate R/min（ARN）	27	63	110
Arrival vacuum pressure kpa	-0.92		
Air consumption flow rate R/min（ARN）	44	100	180
Net weight G	80	140	350

Symbols

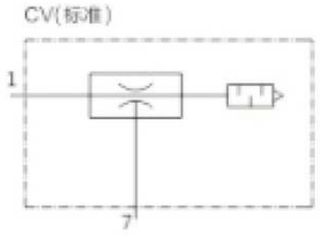

Model number indication method

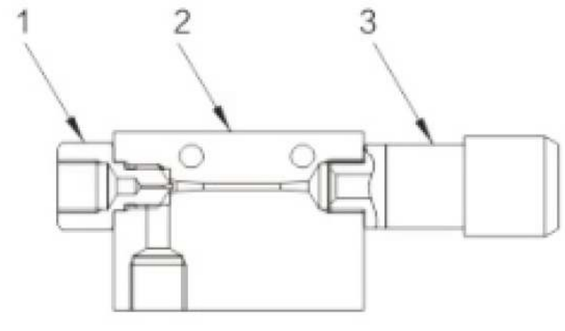

NO.	Name	Material
1	Supply port	Brass
2	Body	Aluminum
3	Muffler	POM

External dimension drawing (mm)

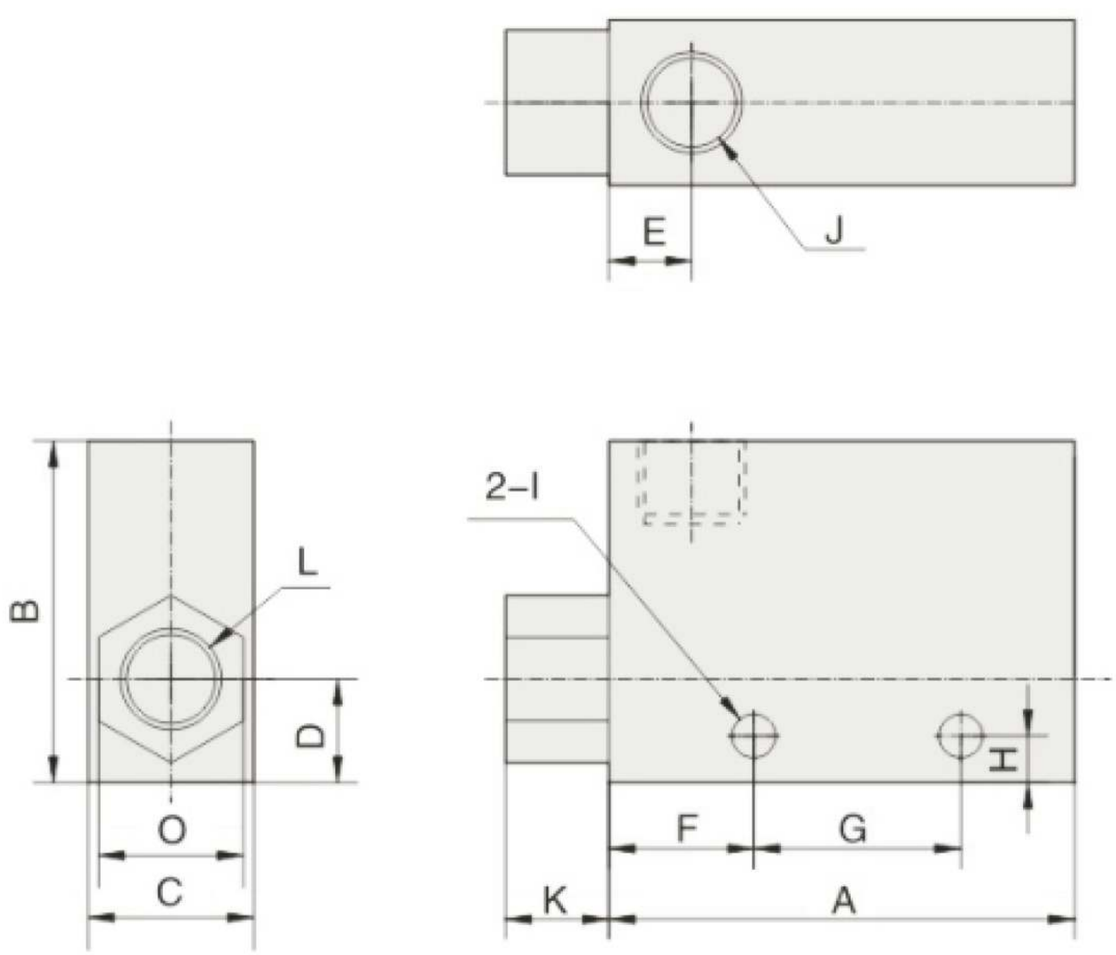

Model	A	B	C	D	E	F	G	H	I	J	K	L	O	P	Muffler Mounting thread
CV-10	45	33	16	10	8	14	20	4.5	Φ4.2	G1/8	10	G1/8	14	90	G1/8
CV-15	64	35	20	11	10	20	25	5	Φ4.5	G1/4	15	G1/4	17	123.5	G1/4
CV-20	85	40	30	15	13	28	32	7	Φ6.0	G3/8	20	G1/4	17	165.5	G1/2

Standard Specification

Model		ASC100-06	ASC200-08	ASC300-10	ASC300-15
Working medium		Air (filtered by 40um filter)			
Joint diameter1		G1/8	G1/4	G3/8	G1/2
Use pressure range		0.05-0.95MPa(7-135psi)			
Guaranteed pressure resistance		1.5MPa(215psi)			
Working temperature		-20-70℃			
Body material	Throttle Valves	200	450	1250	1650
Standard rated flow rate(L/min)	One-way valve	400	800	1500	2500

1There are PT and NPT available by tube tooth type.

Symbols

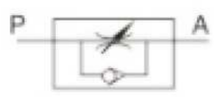

Product Features

1、Lightweight and compact structure.
2、Exhaust throttling, sensitive adjustment, high precision.
3. Multi-position installation, easy to install and use.

Flow characteristics

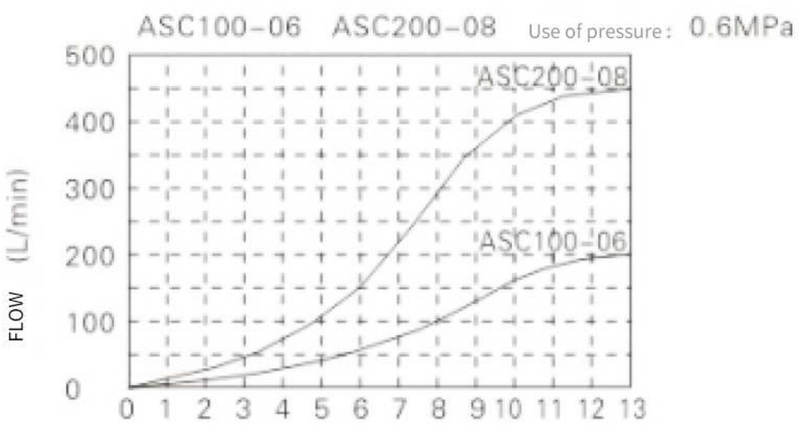

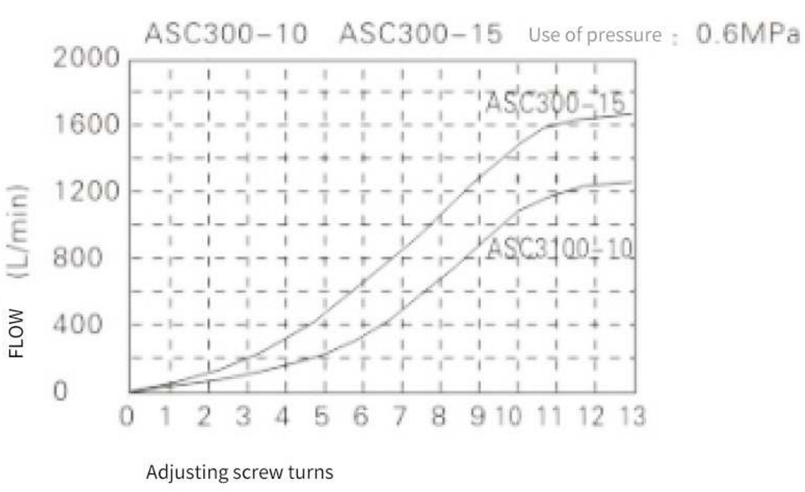

Internal structure

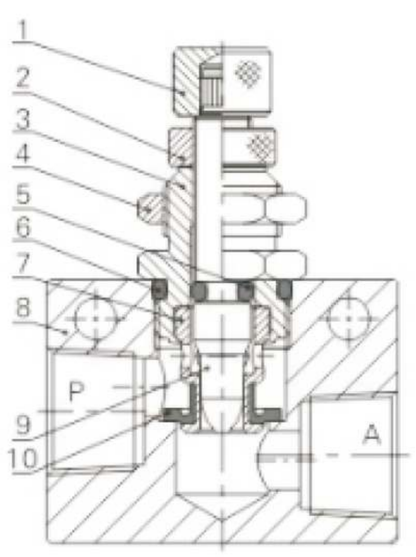

NO.	Name
1	Adjustment Caps
2	Locking Caps
3	Throttle fluid
4	Hexagonal nut
5	0-Ring
6	O-ring
7	Throttle sleeve
8	Throttle body
9	Throttle column
10	Shaped O-ring

Model number indication method

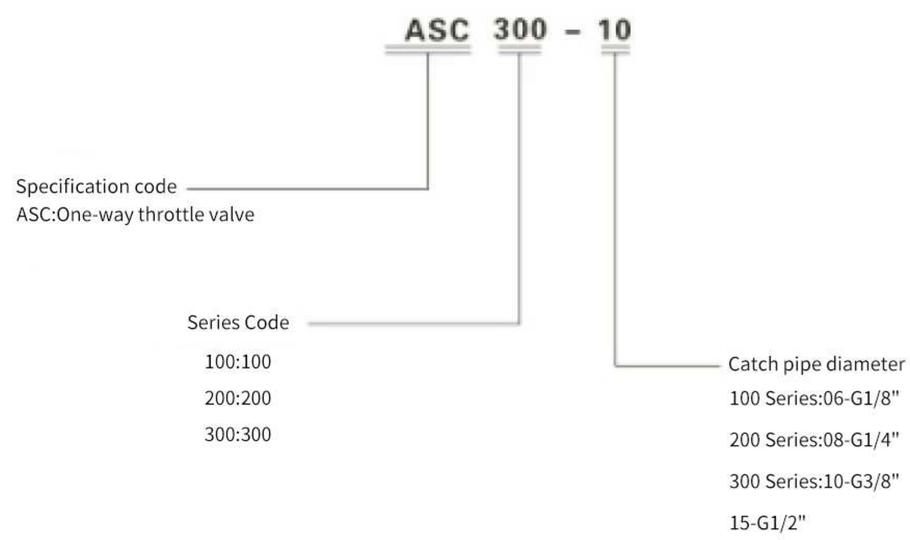

External dimension drawing (mm)

ASC100\200

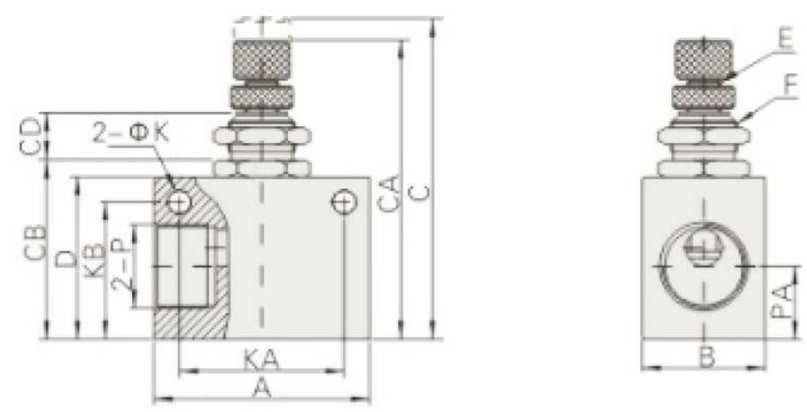

ASC300

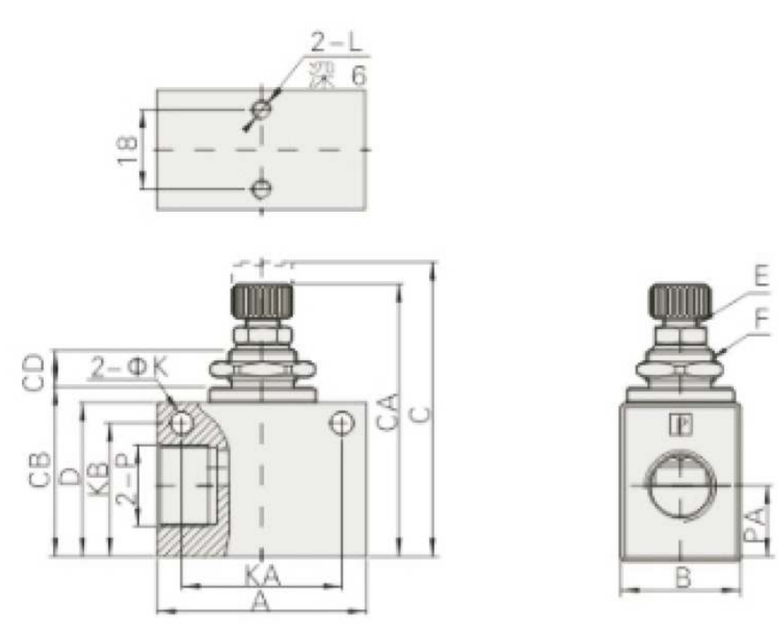

Model/conformity	A	B	C	CA	CB	CD	D	E	F	K	KA	KB
ASC100-06	32	18	52.5	47	26	8.6	23	M6×0.5	M12×0.75	4.3	22	18
ASC200-08	36	18	56.5	51	30	8.6	27	M6×0.5	M12×0.75	4.3	26	23
ASC300-10	50	28	74	65	40.5	10	37	M8×0.75	M16×1.0	5.3	35	32
ASC300-15	50	28	74	65	40.5	10	37	M8×0.75	M16×1.0	5.3	35	32

Model/conformity	L	P	PA
ASC100-06	M4×0.7	G1/8	10
ASC200-08	M4×0.7	G1/4	13.5
ASC300-10	M4×0.7	G3/8	17.5
ASC300-15	M4×0.7	G1/2	17.5

Standard Specification

Item/Model	RE-01 QE-01	RE-02 QE-02	RE-03 QE-03	RE-04 QE-04
Medium used	Air			
Pipe diameter	G1/8	G1/4	G3/8	G1/2
Use pressure	0-0.95Mpa(0-135Psi)			
Working temperature	-5-60℃(28-140°F)			

Model/conformity

RE — Specification code
RE:Flow control valves

01 — Interface pipe diameter
01:G1/8
02:G1/4
03:G3/8
04:G1/2

QE — Specification code
QE:Quick exhaust valve

01 — Interface pipe diameter
01:G1/8
02:G1/4
03:G3/8
04:G1/2

Symbols

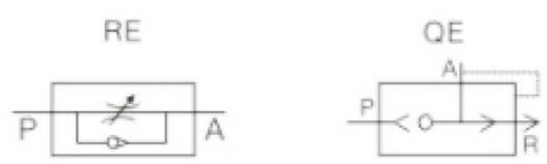

External dimension drawing (mm)

RE

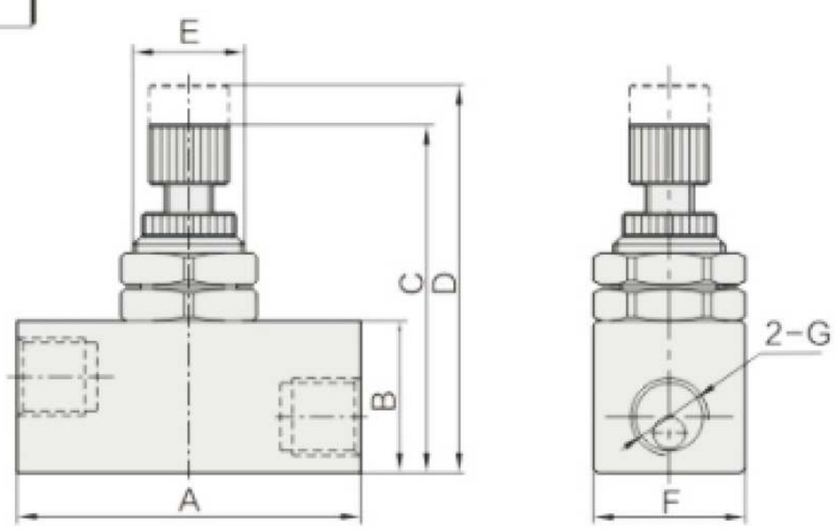

Model/conformity	A	B	C	D	E	F	G
RE-01	43	19	43	49	M14x1	19	G1/8
RE-02	43	19	43	49	M14x1	19	G1/4
RE-03	53	26	54	60	M18x1	26	G3/8
RE-04	53	26	54	60	M18x1	26	G1/2

QE

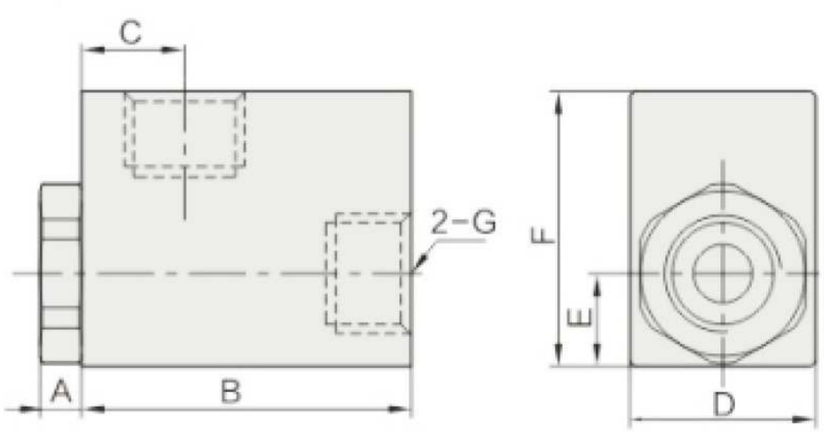

Model/conformity	A	B	C	D	E	F	G
QE-01	4	35	10.5	18	9	27	G1/8
QE-02	6	48	15	28	13.5	36	G1/4
QE-03	6	48	15	28	13.5	36	G3/8
QE-04	6	48	15	28	13.5	36	G1/2

Conformity

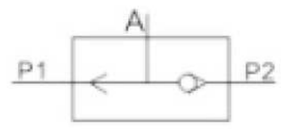

Model number indication method

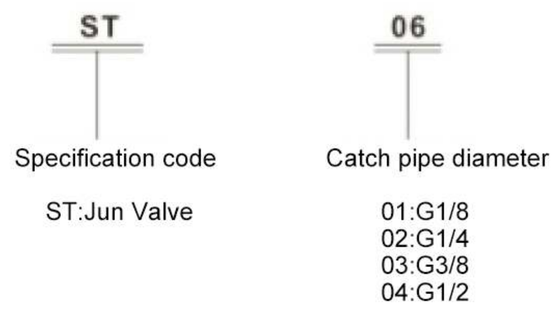

Standard Specification

Item/Model	ST-01	ST-02	ST-03	ST-04
Pipe diameter	G1/8	G1/4	G3/8	G1/2
Effective cross-sectional area mm²	7.5	21	40	60
Use pressure	0-0.95Mpa(0-135Psi)			
Guaranteed pressure resistance	1.5Mpa(213Psi)			
Working temperature	-5-60C(28-140°F)			
Body material	Aluminum alloy			

External dimension drawing (mm)

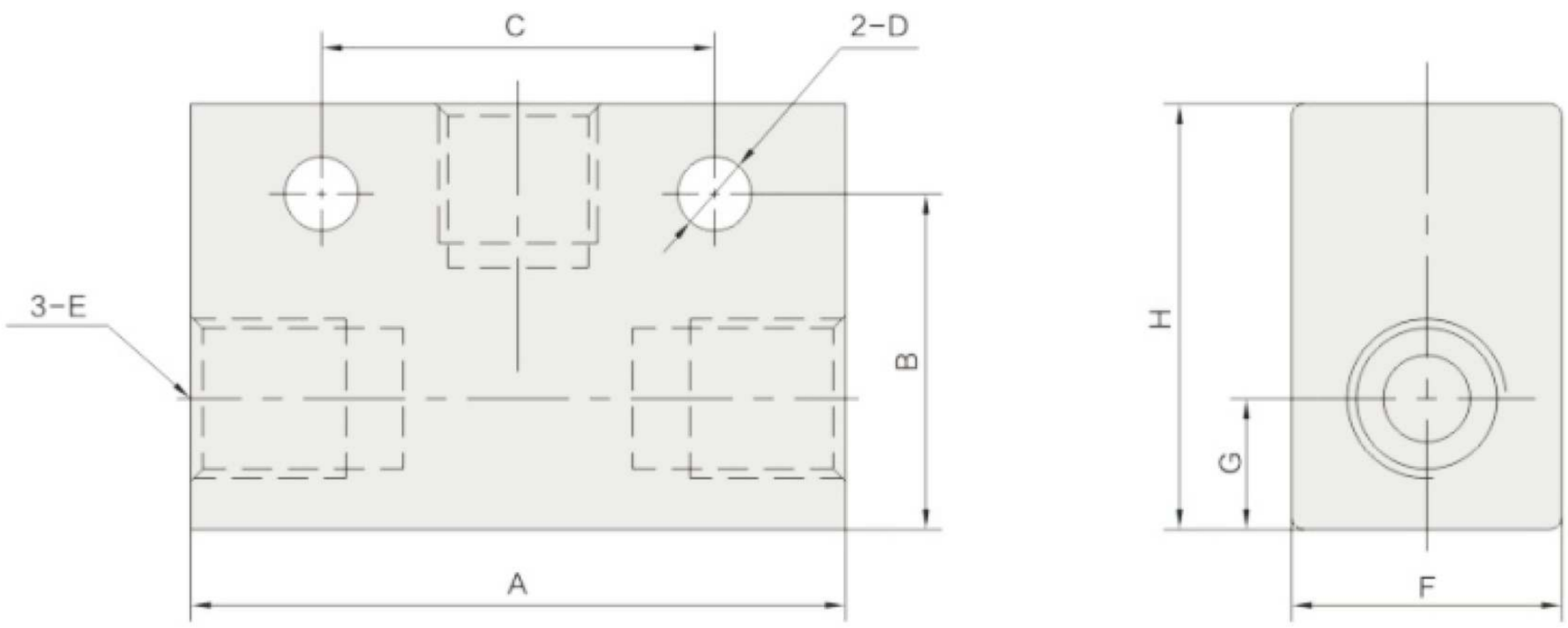

Item/conformity	A	B	C	D	E	F	G	H
ST-01	40	20.5	24	Φ4.5	G1/8	16.5	8	26
ST-02	50	25	35	Φ5.5	G1/4	22	11	35
ST-03	65	32	48	Φ7	G3/8	27	13.5	40
ST-04	70	32	48	Φ7	G1/2	27	13.5	40

Standard Specification

Model	NRV06	NRV08	NRV10	NRV15	NRV20	NRV25
Working medium	Air (filtered by 40um filter)					
Pipe diameter	G1/8	G1/4	G3/8	G1/2	G3/4	G1
Effective cross-sectional area mm³(Cv value)	18(1)	27(1.5)	60(3.33)	73(4.06)	230(12.78)	260(14.44)
Pressure range	0.02-1.0MPa(2.9-145psi)					
Guaranteed pressure resistance	1.5MPA(215psi)					
Operating temperature range	-20-70					
Body material	Aluminum alloy					

Symbols

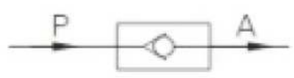

Model Description

KA — Series code: One-way valve

08 — Catch pipe diameter: 06:G1/8" 08:G1/4" 10:G3/8" 15: G1/2 20:G3/4" 25:G1"

External dimension drawing (mm)

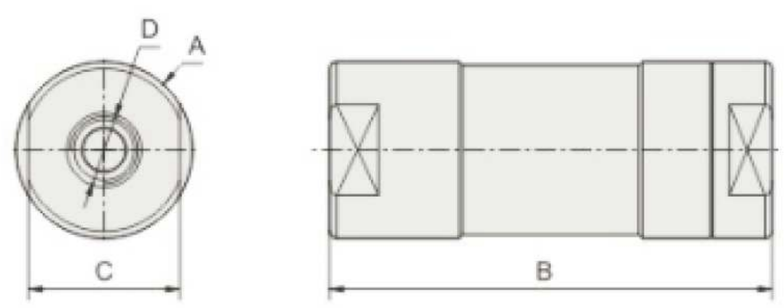

Model	A	B	C	D
KA06	25.2	63	21.6	G1/8
KA08	25.2	63	21.6	G1/4
KA10	38.5	84	34.6	G1/2
KA15	38.5	84	34.6	G3/8
KA20	55	110.5	46	G3/4
KA25	55	110.5	46	G1

Standard Specification

Model	NRV06	NRV08	NRV10	NRV15	NRV20	NRV25
Working medium	Air (filtered by 40um filter)					
Pipe diameter	G1/8	G1/2	G3/8	G3/4	G1/2	G1
Effective cross-sectional area	10	20	40	60	100	190
Pressure range	0.15-0.8MPa(21-114psi)					
Guaranteed pressure resistance	1.5MPA(215psi)					
Operating temperature range	-20-70					
Body material	Aluminum alloy					

Note D: NPT and G are available by tube tooth type

Symbols

Model Description

NRV — Specification code: NRV: One-way valve

08 — Catch pipe diameter: 06:G1/8" 08:G1/4" 10:G3/8" 15: G1/2 20:G3/4" 25:G1"

External dimension drawing (mm)

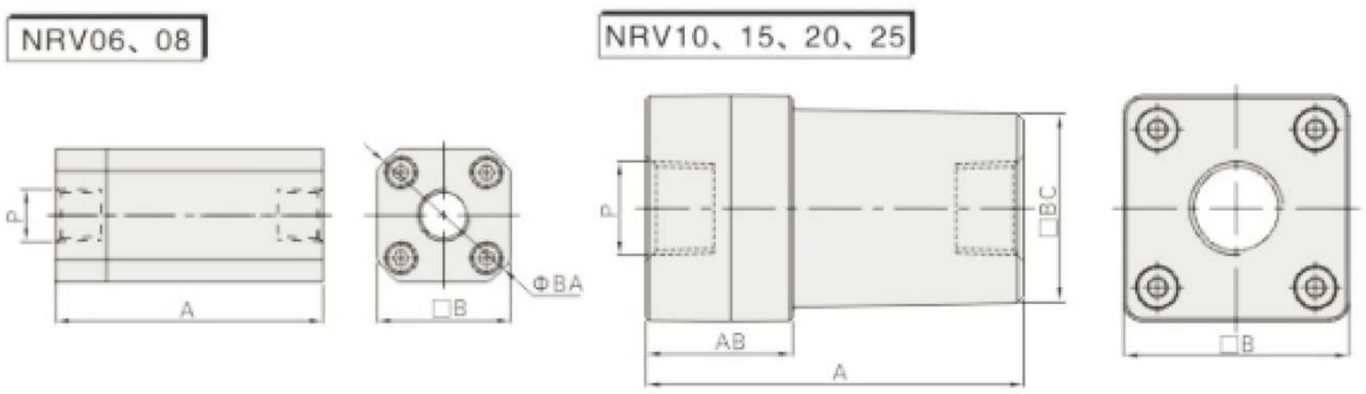

Model \ Symbol	A	AB	B	BA	BC	P
NRV06	50	–	25	30	–	G1/8
NRV08	50	–	25	30	–	G1/4
NRV10	67	26	40	–	33.6	G3/8
NRV15	67	26	40	–	33.6	G1/2
NRV20	95	31.5	52	–	46.7	G3/4
NRV25	95	31.5	52	–	46.7	G1

Gas-electric relay conversion (gas signal to electric signal)

Standard Specification

Model		VR3200-01		VR3201-01
Structure		-		Sealed sockets
Caliber		G1/8		
Operating pressure		0.1-1.0MPa(14-142Psi)		
Contact point		1ab		

Micro switch power

	AC Current		DC Current	
Resistor Capacity	250V 15A		30V 6A	
Inductance capacity	250V 15A			
Lamp Capacity	250V	Normally closed 2.5A	30V	Normally closed 3A
		Normally open 1.25A		Normally open 1.5A

Symbols

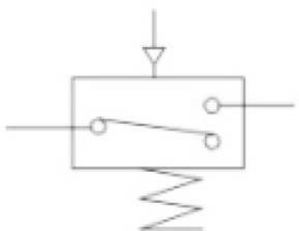

External dimension drawing (mm)

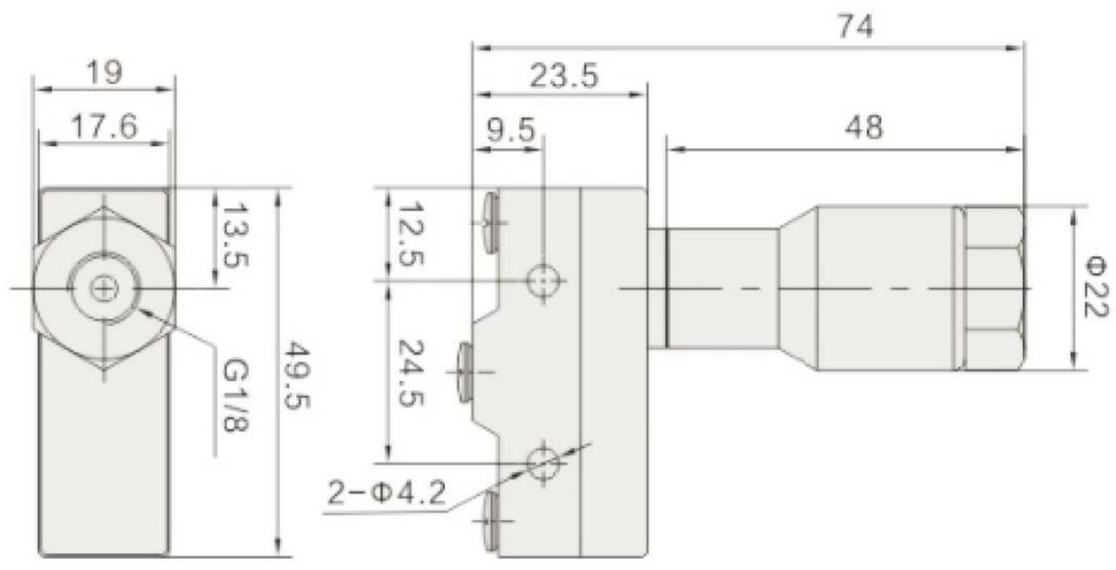

PRINTED ON ECOLOGICAL PAPER @ JUNGONG PNEUMATICJUNGONG PNEUMATIC

This manual is a product overview.
If there is any discrepancy between the picture and the actual product, please refer to the actual product.
If users need more information about our products, please contact our marketing department.

BLW PNEUMATIC

Agent: